Repair Manual

Beetle 2012 ➤ , Golf 2015 ➤ , Golf Variant 2007 ➤ , Golf Variant 2010 ➤ , Golf Variant 2015 ➤ , Jetta 1999 ➤ , Jetta 2005 ➤ , Jetta 2011 ➤ , Jetta 2015 ➤ , New Beetle 1999 ➤ , New Beetle Cabrio 2003 ➤ , New Beetle RSI 2001 ➤ , The Beetle Cabriolet 2012 ➤

Electrical Equipment General Information

Edition 01.2015

Protected by copyright. Copying for private or commercial purposes, in part or in whole, is not permitted unless authorised by Volkswagen AG. Volkswagen AG does not guarantee or accept any liability with respect to the correctness of information in this document. Copyright by Volkswagen AG.

List of Workshop Manual Repair Groups

Repair Group

27 - Battery, Starter, Generator, Cruise Control

92 - Wiper/Washer Systems

94 - Exterior Lights, Switches

96 - Interior Lights, Switches

97 - Wiring

Protected by copyright. Copying for private or commercial purposes, in part or in whole, is not permitted unless authorised by Volkswagen AG. Volkswagen AG does not guarantee or accept any liability with respect to the correctness of information in this document. Copyright by Volkswagen AG.

Technical information should always be available to the foremen and mechanics, because their careful and constant adherence to the instructions is essential to ensure vehicle road-worthiness and safety. In addition, the normal basic safety precautions for working on motor vehicles must, as a matter of course, be observed.

All rights reserved.
No reproduction without prior agreement from publisher.

Copyright © 2015 Volkswagen AG, Wolfsburg

Contents

27 - Battery, Starter, Generator, Cruise Control . . . 1

1 Battery . . . 1
1.1 Battery Types . . . 1
1.2 Battery General Information . . . 3
1.3 Warnings and Safety Precautions . . . 3
1.4 Battery Post/Terminal . . . 6

2 Battery, Checking . . . 7
2.1 Different Types of Batteries, Checking . . . 7
2.2 Visual Inspection . . . 9
2.3 Color Display in Battery Cover, Checking, Visual Indicator . . . 10
2.4 Battery Tester with Printer VAS5097A . . . 12
2.5 Battery Tester VAS6161 . . . 18
2.6 Midtronics Battery Tester MCR340VKT . . . 24
2.7 Battery Test with Vehicle Diagnostic Tester . . . 28
2.8 Current Draw Test . . . 28
2.9 Battery, Checking Resting Voltage, Vehicles in Storage or Inventory . . . 30

3 Battery, Charging . . . 31
3.1 Battery Charger VAS5095A . . . 31
3.2 Battery Charger VAS5900 . . . 37
3.3 Battery Charger VAS5903 . . . 48
3.4 Battery Charger VAS5906 . . . 59
3.5 Battery Tester Charger Kit GRX3000VAS . . . 61
3.6 Solar Battery Maintainer VAS6102A . . . 67
3.7 Severely Discharged Batteries . . . 68

4 Cruise Control System . . . 70
4.1 Cruise Control System Function . . . 70
4.2 Cruise Control System, Activating and Deactivating . . . 70

5 Special Tools . . . 71

92 - Wiper/Washer Systems . . . 73

1 Washer Fluid Hoses . . . 73
1.1 Windshield and Rear Window Washer System . . . 73
1.2 Headlamp Washer System . . . 74
1.3 Washer Fluid Hoses, Servicing . . . 74

2 Joint-Free Wiper Blade Characteristics . . . 77
2.1 Joint-Free Wiper Blade Characteristics . . . 77

3 Special Tools . . . 78

94 - Exterior Lights, Switches . . . 79

1 HID Headlamp Usage and Safety Precautions . . . 79
1.1 Safety Precautions . . . 79

96 - Interior Lights, Switches . . . 82

1 Cigarette Lighter and Socket . . . 82
1.1 Overview - Cigarette Lighter, 12 V Socket . . . 82
1.2 Cigarette Lighter U1 , Removing and Installing . . . 83
1.3 Socket Illumination Bulb L42 , Removing and Installing . . . 86
1.4 Cigarette Lighter Illumination Bulb L28 , Removing and Installing . . . 86

2 Special Tools . . . 88

97 - Wiring . . . 89

1 Vehicle Diagnosis, Testing and Information Systems . . . 89

Copyright by Volkswagen AG. Volkswagen AG does not guarantee or accept any liability with respect to the correctness of information in this document. Copyright by Volkswagen AG. Reproduction, copying or publication, in whole or in part, for commercial purposes, is not permitted unless authorised by Volkswagen AG.

1.1 Description of Vehicle Diagnosis, Testing and Information Systems . . . 89
1.2 Connect the Vehicle Diagnostic Tester . . . 89
1.3 Vehicle Diagnostic Tester, Connecting, Golf MY 1998 through 2003 . . . 90
2 Connectors . . . 91
2.1 Wiring Harnesses and Connectors, Repairing . . . 91
2.2 Vehicle Electrical System, General Repair Information . . . 96
2.3 Wiring Harnesses, Repairing . . . 98
3 Connector Housings, Releasing and Disassembling . . . 107
3.1 Connector Housings, Releasing and Disassembling . . . 107
3.2 Connector Housings and Connectors, Repairing . . . 112
4 Contact Surfaces, Cleaning . . . 117
4.1 Contact Surface Cleaning Set VAS6410 . . . 117
5 Antenna Wires, Repairing . . . 123
5.1 General Information . . . 123
5.2 Overview - Antenna Wiring . . . 123
5.3 New Antenna Wire, Installing . . . 123
6 Fiber-Optic Cable . . . 125
6.1 Fiber-Optic Cables, Repairing . . . 125
6.2 Fiber-Optic Cable, Assembling . . . 125
6.3 Fiber-Optic Cable, Disconnecting from Wiring Harness Connector . . . 130
7 Heated Oxygen Sensor, Replacing . . . 131
7.1 Heated Oxygen Sensor, Replacing, 4-Pin Universal Oxygen Sensor . . . 131
7.2 Heated Oxygen Sensor, Replacing, 6-Pin Universal Oxygen Sensor . . . 131
7.3 Oxygen Sensor Unit Protective Pipes . . . 132
8 Special Tools . . . 134
9 Revision History . . . 137

Protected by copyright. Copying for private or commercial purposes, in part or in whole, is not permitted unless authorised by Volkswagen AG. Volkswagen AG does not guarantee or accept any liability with respect to the correctness of information in this document. Copyright by Volkswagen AG.

27 – Battery, Starter, Generator, Cruise Control

1 Battery

(Edition 01.2015)

⇒ “1.1 Battery Types”, page 1

⇒ “1.2 Battery General Information”, page 3

⇒ “1.3 Warnings and Safety Precautions”, page 3

⇒ “1.4 Battery Post/Terminal”, page 6

1.1 Battery Types

⇒ “1.1.1 Battery with Visual Indicator, Standard ”, page 1

⇒ “1.1.2 AGM Battery”, page 2

⇒ “1.1.3 EFB Battery with Visual Indicator, Enhanced ”, page 2

1.1.1 Battery with Visual Indicator, »Standard«

Maintenance-free Battery - A- with fluid electrolyte (wet battery)

> ⚠ **Caution**
>
> *Do not remove any of the labels on the battery and do not add distilled water. Perform only a visual inspection. Note the chapter on battery testing. Refer to ⇒ “2 Battery, Checking”, page 7 .*

> ⚠ **WARNING**
>
> *Do not check or charge a Battery - A- when the visual indicator has »no color or is bright yellow«. Jump starting must not be used!*
>
> *There is a risk of explosion during testing, charging or jump starting.*
>
> *These Batteries - A- must be replaced.*

This Battery - A- has a color display (visual indicator). The colors in the visual indicator show the Battery - A- charge and electrolyte level.

Visual indicator, checking. Refer to ⇒ “2.3 Color Display in Battery Cover, Checking, Visual Indicator”, page 10 .

Using approved battery chargers, all tests can be performed on these batteries. Observe the settings on the battery charger. Refer to ⇒ “2 Battery, Checking”, page 7 .

Volkswagen AG. Volkswagen AG does not guarantee or accept any liability with respect to the correctness of information in this document. Copyright by Volkswagen AG. Protected by copyright. Copying for private or commercial purposes, in part or in whole, is not permitted unless authorised.

Protected by copyright. Copying for private or commercial purposes, in part or whole, is not permitted unless authorised by Volkswagen AG. Volkswagen AG does not guarantee or accept any liability with respect to the correctness of information in this document. Copyright by Volkswagen AG.

1.1.2 AGM Battery

Maintenance-free Battery - A- with fixed electrolyte (AGM battery)

> ⚠ **Caution**
>
> *Do not remove any of the labels on the battery and do not add distilled water. Perform only a visual inspection. Note the chapter on battery testing. Refer to ⇒ "2 Battery, Checking", page 7 .*

Lead-acid battery, where the electrolyte is fixed in an absorbent glass mat (AGM). The Battery - A- is closed and equipped with breather valves.

"AGM" is the English abbreviation for »absorbent glass mat«.

These Batteries - A- cannot have a visual indicator due to the fixed electrolyte. AGM is on the Battery - A- to identify it.

When replacing an AGM battery, another AGM battery must be installed.

Using approved battery chargers, all tests can be performed on AGM batteries. Observe the settings on the battery charger. Refer to ⇒ "2 Battery, Checking", page 7 .

1.1.3 EFB Battery with Visual Indicator, »Enhanced«

Maintenance-free Battery - A- with fluid electrolyte (wet battery)

> ⚠ **Caution**
>
> *Do not remove any of the labels on the battery and do not add distilled water. Perform only a visual inspection. Note the chapter on battery testing. Refer to ⇒ "2 Battery, Checking", page 7 .*

> ⚠ **WARNING**
>
> *Do not check or charge a Battery - A- when the visual indicator has »no color or is bright yellow«. Jump starting must not be used!*
>
> *There is a risk of explosion during testing, charging or jump starting.*
>
> *These Batteries - A- must be replaced.*

The Battery - A- is installed in certain Stop/Start vehicles due to special requirements. "EFB" is written on the battery cover to identify this battery.

"EFB" stands for »Enhanced Flooded Battery« (enhanced wet battery).

An EFB battery may only be replaced with another EFB battery.

An EFB battery has a visual indicator for checking the battery electrolyte level.

Note

EFB batteries are being installed in smaller gasoline engines with the Stop/Start system and a manual transmission from 05/2011.

Visual indicator, checking. Refer to ⇒ "2.3 Color Display in Battery Cover, Checking, Visual Indicator", page 10 .

Using approved battery chargers, all tests can be performed on EFB batteries. Observe the settings on the battery charger. Refer to ⇒ "2 Battery, Checking", page 7 .

1.2 Battery General Information

To guarantee a long service life, the Battery - A- must be checked, serviced and maintained as described in this manual.

The Battery - A- supplies the power to start the engine. The Battery - A- also acts as a power reserve for the entire vehicle electrical system.

Note

Refer to ⇒ Self Study Program No. 234 ; Battery .

Caution

In order to prevent damage to the Battery - A- or vehicle, observe the battery type information. Refer to ⇒ "1.1 Battery Types", page 1 .

WARNING

Risk of injury. Follow all warning messages and safety precautions. Refer to ⇒ "1.3 Warnings and Safety Precautions", page 3 .

1.3 Warnings and Safety Precautions

⇒ "1.3.1 Dangers When Working with Batteries", page 3

⇒ "1.3.2 Battery Safety Label", page 5

⇒ "1.3.3 Working on Airbag System", page 5

1.3.1 Dangers When Working with Batteries

Recognizing and Preventing Risks

Batteries - A- present risks. Read the warnings on the Battery - A- label, in the Owner's Manual and in ELSA to prevent these risks.

Protected by copyright. Copyright for private or commercial purposes, in part or in whole is not permitted unless authorised by Volkswagen AG. Volkswagen AG does not guarantee or accept any liability with respect to the correctness of information in this document. Copyright by Volkswagen AG.

WARNING

- *Personnel instructed in protection, such as a trainee or an apprentice, may only perform work on vehicle Batteries - A- under supervision of technical personnel, for example, a master automotive technician or a master automotive electrician.*
- *Acid has strong corrosive properties. If Batteries - A- are handled inappropriately, there is a risk that personal injury may result from exposure to harmful electrolyte influences. Therefore, suitable remedies for acid damage must be kept readily available. Soapy water would be a suitable remedy.*
- *If electrolyte drips out from the Battery - A- , skin can be burned by acid and the vehicle may be affected by acid erosion and corrosion. It is a possibility that safety-related vehicle components can be damaged.*
- *When charging and when resting after charging, explosive gas is present. In extreme cases, if the Battery - A- is handled inappropriately, the emitted gases may cause the battery to explode.*
- *Replace a Battery - A- if the visual indicator has »no color or is bright yellow«. They may not be tested or charged and jump starting may not be used. There is a risk of explosion during testing, charging or jump starting.*
- *Producing sparks by sanding, welding, cutting and open flames, (also from smoking near the battery) is forbidden. Producing sparks through electrostatic discharge must also be avoided. Always touch the vehicle body before touching the Battery - A- .*
- *Only perform Battery - A- procedures in suitable and well-ventilated locations.*

Protected by copyright. Copying for private or commercial purposes, in part or in whole, is not permitted unless authorised by Volkswagen AG. Volkswagen AG does not guarantee or accept any liability with respect to the correctness of information in this document. Copyright by Volkswagen AG.

1.3.2 Battery Safety Label

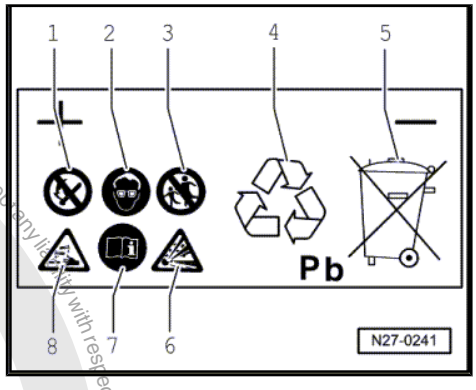

Safety Label on the Battery - A-

1 - When working in the area of the Battery - A- , fire, sparks, open flame and smoking are prohibited. Avoid sparks when working with cables and electrical devices, and from electrostatic discharge. Avoid short circuits. For this reason, tools should not be rested on the Battery - A- .

2 - Wear protective eyewear when working on the Battery - A- .

3 - Always keep acid and Batteries - A- out of the reach of children.

4 - Disposal: old batteries require special disposal. They may only be disposed of at a suitable collection facility and only in consideration of legal regulations.

5 - Do not dispose of old batteries in household waste.

6 - When handling Batteries - A- , there is a risk of explosion. Battery - A- charging produces a highly explosive gas mixture.

7 - Always follow instructions on the Battery - A- , in the Parts Catalog and in the Owner's Manual.

8 - Danger of burns: battery acid is severely corrosive, therefore protective gloves and eyewear must be worn when working on the Battery - A- . The Battery - A- must not be tipped because acid may spill from the ventilation openings.

1.3.3 Working on Airbag System

WARNING

When working on the airbag system (pyrotechnic components, Airbag Control Module - J234- , wiring), the ground cable must be disconnected with the ignition switched on.

Exceptions: On vehicles with a battery in the vehicle interior, the ignition must be switched off.

- *Then cover the negative terminal.*
- *After disconnecting the battery, a wait time of 10 seconds is required.*
- *The battery must be connected with the ignition switched on.*
- *There must be no one inside the vehicle when connecting the battery.*

Make sure in this case to keep oneself away from the airbag deployment and belt tensioner zones.

If the ignition is not switched on after reconnecting the battery (the indicator lamps in the instrument cluster do not illuminate), the ignition (key/button) may only be switched on while sitting in the driver's seat in the rearmost position.

Protected by copyright. Copyright by Volkswagen AG. Volkswagen AG does not guarantee or accept any liability with respect to the correctness of information in this document. Copyright by Volkswagen AG.

1.4 Battery Post/Terminal

Caution

In order to prevent damage to the battery terminals and battery posts, observe the following:

- *Never use force to attach the battery terminals by hand.*
- *Do not apply grease to battery posts.*
- *The battery terminal clamps should be mounted so that the battery terminal sits flush with the clamp or protrudes out of it.*
- *After tightening the battery terminal clamps to the specified torque, the threaded connections must not be tightened again.*

Terminal clamp tightening specification. Refer to ⇒ Electrical Equipment; Rep. Gr. 27 ; Battery; Battery Assembly Overview .

Protected by copyright. Copying for private or commercial purposes, in part or in whole, is not permitted unless authorised by Volkswagen AG. Volkswagen AG does not guarantee or accept any liability with respect to the correctness of information in this document. Copyright by Volkswagen AG.

2 Battery, Checking

⇒ “2.1 Different Types of Batteries, Checking”, page 7

⇒ “2.2 Visual Inspection”, page 9

⇒ “2.3 Color Display in Battery Cover, Checking, Visual Indicator”, page 10

⇒ “2.4 Battery Tester with Printer VAS5097A ”, page 12

⇒ “2.5 Battery Tester VAS6161 ”, page 18

⇒ “2.6 Midtronics Battery Tester MCR340VKT ”, page 24

⇒ “2.7 Battery Test with Vehicle Diagnostic Tester”, page 28

⇒ “2.8 Current Draw Test”, page 28

⇒ “2.9 Battery, Checking Resting Voltage, Vehicles in Storage or Inventory”, page 30

2.1 Different Types of Batteries, Checking

⇒ “2.1.1 Battery with Color Display, Visual Indicator, Checking”, page 7

⇒ “2.1.2 AGM Battery, Checking”, page 8

⇒ “2.1.3 EFB Battery, Checking”, page 8

2.1.1 Battery with Color Display, Visual Indicator, Checking

WARNING

Risk of injury. Follow all warning messages and safety precautions. Refer to ⇒ “1.3 Warnings and Safety Precautions”, page 3 .

Perform the Tests in the Following Sequence:

1. Visual inspection. Refer to ⇒ “2.2 Visual Inspection”, page 9 .
2. Color display test

- Three colors. Refer to ⇒ “2.3.1 3-Color Visual Indicator, Checking, through 03/2008”, page 10 .
- Two colors. Refer to ⇒ “2.3.2 2-Color Visual Indicator, Checking, from 04/2008”, page 11 .

WARNING

Do not check or charge a Battery - A- when the visual indicator has »no color or is bright yellow«. Jump starting must not be used!

There is a risk of explosion during testing, charging or jump starting.

These Batteries - A- must be replaced.

Protected by copyright. Copyright by Volkswagen AG. Volkswagen AG does not guarantee or accept any liability with respect to the correctness of information in this document. Copying for private or commercial purposes, in part or in whole, is not permitted unless authorised by Volkswagen AG.

Protected by copyright. Copying for private or commercial purposes, in part or in whole, is not permitted unless authorised by Volkswagen AG. Volkswagen AG does not guarantee or accept any liability with respect to the correctness of information in this document. Copyright by Volkswagen AG.

Note

The Battery Tester with Printer - VAS5097A- is no longer used for warranty testing. Only the Battery Tester - VAS6161- is still being used.

3. Battery load test using

- Battery Tester with Printer - VAS5097A- . Refer to
  ⇒ "2.4.3 Battery Load Test", page 13 .
- Battery Tester - VAS6161- . Refer to
  ⇒ "2.5 Battery Tester VAS6161 ", page 18 .
- Midtronics Battery Tester - MCR340VKT- (USA/Canada only). Refer to
  ⇒ "2.6 Midtronics Battery Tester MCR340VKT ", page 24 .

4. Depending on the result of the battery load test, "perform current draw test". Refer to
   ⇒ "2.8 Current Draw Test", page 28 .

2.1.2 AGM Battery, Checking

WARNING

Risk of injury. Follow all warning messages and safety precautions. Refer to ⇒ "1.3 Warnings and Safety Precautions", page 3 .

Perform the Tests in the Following Sequence:

1. Visual inspection. Refer to
   ⇒ "2.2 Visual Inspection", page 9 .

Note

The Battery Tester with Printer - VAS5097A- is no longer used for warranty testing. Only the Battery Tester - VAS6161- is still being used.

2. Battery load test using

- Battery Tester with Printer - VAS5097A- . Refer to
  ⇒ "2.4.3 Battery Load Test", page 13 .
- Battery Tester - VAS6161- . Refer to
  ⇒ "2.5 Battery Tester VAS6161 ", page 18 .
- Midtronics Battery Tester - MCR340VKT- (USA/Canada only). Refer to
  ⇒ "2.6 Midtronics Battery Tester MCR340VKT ", page 24 .

3. Depending on the result of the battery load test, "perform current draw test". Refer to
   ⇒ "2.8 Current Draw Test", page 28 .

2.1.3 EFB Battery, Checking

WARNING

Risk of injury. Follow all warning messages and Safety Precautions.

Perform the Tests in the Following Sequence:

1. Visual inspection. Refer to
⇒ “2.2 Visual Inspection”, page 9 .

Note

The Battery Tester with Printer - VAS5097A- is no longer used for warranty testing. Only the Battery Tester - VAS6161- is still being used.

2. Battery load test using

- Battery Tester with Printer - VAS5097A- . Refer to
⇒ “2.4.3 Battery Load Test”, page 13 .
- Battery Tester - VAS6161- . Refer to
⇒ “2.5.3 Battery Test, Performing using Battery Tester VAS6161 ”, page 19 .
- Midtronics Battery Tester - MCR340VKT- (USA/Canada only). Refer to
⇒ “2.6.3 Battery Test, Performing using Midtronics Battery Tester MCR340VKT ”, page 25 .

3. Depending on the result of the battery load test, “perform current draw test”. Refer to
⇒ “2.8 Current Draw Test”, page 28 .

2.2 Visual Inspection

WARNING

Risk of injury. Follow all warning messages and safety precautions. Refer to ⇒ “1.3 Warnings and Safety Precautions”, page 3 .

Before any extensive measurements are taken, visually inspect the exterior of the battery, the connections, and the secure installation of the Battery - A- .

For each vehicle. Refer to ⇒ Maintenance ; Booklet for information regarding the battery.

Caution

- *An improperly secured Battery - A- can lead to damage.*
- *Excessive vibration due to an improperly secured battery will reduce the battery service life, and the battery hold-down bracket could damage the battery housing and lead to electrolyte leakage.*
- *Make sure the Battery - A- is secure. If required, tighten the mounting bolt to the tightening specification.*

Visual Inspection Points:

- Damage to the battery case. Acid can leak out if the case is damaged. Battery acid that has leaked out can cause severe damage to the vehicle. Acid that has leaked onto any part of the vehicle should be immediately treated with acid neutralizer or soap solution.
- Damage on the battery poles. If the battery terminals are damaged, contact with battery terminals clamps cannot be guaranteed. When connecting the battery terminal clamps, always

Protected by copyright. Copyright by Volkswagen AG. Volkswagen AG does not guarantee or accept any liability with respect to the correctness of information in this document. Copyright by Volkswagen AG. Volkswagen AG authorises the reproduction of this document, in part or in whole, is not permitted unless authorised by Volkswagen AG. Volkswagen AG does not guarantee or accept any liability with respect to the correctness of information in this document. Copyright by Volkswagen AG.

keep the tightening specification for the corresponding vehicle from the repair manual in mind. Refer to ⇒ Electrical Equipment; Rep. Gr. 27 ; Overview - Battery . If the battery post clamps are not correctly installed and secured, the wiring may burn. Substantial malfunctions to the electrical system are a consequence. Safe operation of the vehicle can no longer be guaranteed.

2.3 Color Display in Battery Cover, Checking, Visual Indicator

⇒ "2.3.1 3-Color Visual Indicator, Checking, through 03/2008", page 10

⇒ "2.3.2 2-Color Visual Indicator, Checking, from 04/2008", page 11

2.3.1 "3-Color" Visual Indicator, Checking, through 03/2008

WARNING

Risk of injury. Follow all warning messages and safety precautions. Refer to ⇒ "1.3 Warnings and Safety Precautions", page 3 .

Visual Indicator General Information:

The visual indicator provides information concerning the electrolyte level and the Battery - A- charge level.

To obtain an accurate reading, gently tap the charge indicator with a screwdriver handle or rock vehicle slightly. By doing this, the air bubbles that occur normally during battery charging (even during vehicle operation) that adversely affect charge indicator reading will be displaced. Thereby, the color indicator of the visual indicator is more accurate.

Note

- *Air bubbles can form under the visual indicator, especially if a Battery - A- was recharged or if the Battery - A- was charged while driving. These bubbles may cause the visual indicator to read inaccurately.*
- *As the charge indicator is located in a single cell, the indication is only valid for that cell. An exact assessment of the battery condition should always be confirmed through a battery test. Refer to ⇒ "2.4.3 Battery Load Test", page 13 .*
- *The visual indicator can be installed at various locations on top of the Battery - A- .*

There Are Three Possible Color Indications:

- »Green«: the Battery - A- is sufficiently charged.
- »Black«: the Battery - A- is partially charged, the charge level is less than 65% or discharged.
- »No color/bright yellow«: the Battery - A- must be replaced.

Protected by copyright. Copying for commercial purposes, in part or in whole, is not permitted unless authorised by Volkswagen AG. Volkswagen AG does not guarantee or accept any liability with respect to the correctness of information in this document. Copyright by Volkswagen AG.

Protected by copyright. Copying for private or commercial purposes, in part or in whole, is not permitted unless authorised by Volkswagen AG. Volkswagen AG does not guarantee or accept any liability with respect to the correctness of information in this document. Copyright by Volkswagen AG.

> WARNING
>
> *Do not check or charge a Battery - A- when the visual indicator has »no color or is bright yellow«. Jump starting must not be used!*
>
> *There is a risk of explosion during testing, charging or jump starting.*
>
> *These Batteries - A- must be replaced.*

2.3.2 “2-Color” Visual Indicator, Checking, from 04/2008

> WARNING
>
> *Risk of injury. Follow all warning messages and safety precautions. Refer to* *⇒ “1.3 Warnings and Safety Precautions”, page 3* *.*

Visual Indicator General Information:

The »green« visual indicator for the charge level indicator is no longer used for these Batteries - A- . Only »black« or »no color or bright yellow« are used.

The visual indicator shows the Battery - A- electrolyte level.

It is no longer possible to read the Battery - A- charge level using the visual indicator. It is necessary to perform a battery test. Refer to ⇒ “2.4.3 Battery Load Test”, page 13 .

To obtain an accurate reading, gently tap the charge indicator with a screwdriver handle or rock vehicle slightly. By doing this, the air bubbles that occur normally during battery charging (even during vehicle operation) that adversely affect charge indicator reading will be displaced. Thereby, the color indicator of the visual indicator is more accurate.

Note

- *Air bubbles can form under the visual indicator, especially if a Battery - A- was recharged or if the Battery - A- was charged while driving. These bubbles may cause the visual indicator to read inaccurately.*
- *As the charge indicator is located in a single cell, the indication is only valid for that cell. An exact assessment of the battery condition should always be confirmed through a battery test. Refer to* *⇒ “2.4.3 Battery Load Test”, page 13* *.*
- *The visual indicator can be installed at various locations on top of the Battery - A- .*

Two Visual Indicators Are Possible

- »black«: the electrolyte level is OK
- »No color or light yellow«: electrolyte level too low. Replace the Battery - a- .

WARNING

Do not check or charge a Battery - A- when the visual indicator has »no color or is bright yellow«. Jump starting must not be used!

There is a risk of explosion during testing, charging or jump starting.

These Batteries - A- must be replaced.

2.4 Battery Tester with Printer - VAS5097A-

⇒ "2.4.1 General Information", page 12

⇒ "2.4.2 Battery Tester with Printer VAS5097A Device Description", page 13

⇒ "2.4.3 Battery Load Test", page 13

⇒ "2.4.4 Cold Crank Amps Table", page 15

⇒ "2.4.5 Battery Load Test Results", page 16

⇒ "2.4.6 Printed Test Results Explanations", page 17

⇒ "2.4.7 Test Result Evaluation", page 17

2.4.1 General Information

WARNING

Risk of injury. Follow all warning messages and safety precautions. Refer to ⇒ "1.3 Warnings and Safety Precautions", page 3 .

It is not necessary to disconnect or remove the Battery - A- when using the Battery Tester with Printer - VAS5097A- .

The following Batteries - A- can be tested using the Battery Tester with Printer - VAS5097A- :

- 80 to 499 A cold crank amps according to German Industry Standardization DIN (Deutsche Industrie Norm). Refer to [1].
- 95 to 574 A cold cranking output according to IEC (International Engineering Consortium)
- 136 to 855 A cold cranking output according to EN/ SAE (Europäische Norm/ Standard of Automotive Engineers)

1) Batteries - A- with cold crank amps greater than 499 A according to DIN can be tested with the setting for 499 A according to DIN.

The Batteries - A- are tested by being loaded with current that corresponds to the starter current of a vehicle. Under this load, the Battery - A- is evaluated and the measured results are output through the printer.

Note

Read the Battery Tester with Printer - VAS5097A- Operating Instructions and Battery Tester with Printer - VAS5097A- Quick Reference Guide label on the Battery Tester with Printer - VAS5097A- and the cold crank amps table. Refer to ⇒ "2.4.4 Cold Crank Amps Table", page 15 .

Protected by copyright. Copying or printing in whole or in part is not permitted unless authorised by Volkswagen AG. Volkswagen AG does not guarantee or accept any liability with respect to the correctness of information in this document. Copyright by Volkswagen AG.

- Battery Tester with Printer - VAS5097A- device description. Refer to ⇒ “2.4.2 Battery Tester with Printer VAS5097A Device Description”, page 13 .
- Battery load test. Refer to ⇒ “2.4.3 Battery Load Test”, page 13 .
- Cold crank amps table. Refer to ⇒ “2.4.4 Cold Crank Amps Table”, page 15 .
- Battery load test results. Refer to ⇒ “2.4.5 Battery Load Test Results”, page 16 .
- Printed test results explanations. Refer to ⇒ “2.4.6 Printed Test Results Explanations”, page 17 .
- Test result evaluation. Refer to ⇒ “2.4.7 Test Result Evaluation”, page 17 .

2.4.2 Battery Tester with Printer - VAS5097A- Device Description

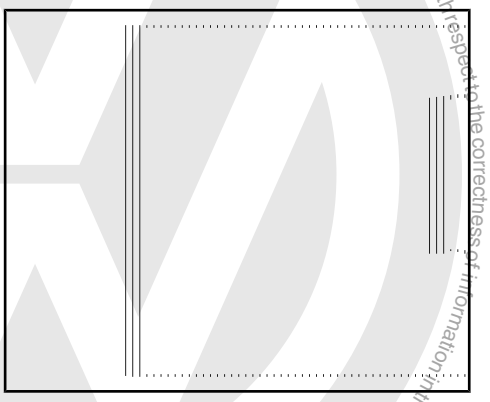

Battery Tester with Printer - VAS5097A-

1 - LED green, “Device in use”

2 - LED red, “Device connected with terminals reversed”

3 - LED red “Battery cannot be tested”, the Battery - A- must be replaced.

4 - `Start` button

5 - Cold cranking output selector switch

6 - `ON/OFF` function switch

7 - Sliding switch (battery hook-up to the Battery - A- /at jump start point)

8 - `Paper-feed` -button

9 - Printer

2.4.3 Battery Load Test

Special tools and workshop equipment required

- Battery Tester with Printer - VAS5097A-

> ⚠ **WARNING**
>
> *Risk of injury. Follow all warning messages and safety precautions. Refer to* *⇒ “1.3 Warnings and Safety Precautions”, page 3* .

Always note the TPL 2012182.

Protected by copyright. Copying for private or commercial purposes, in part or in whole, is not permitted unless authorised by Volkswagen AG. Volkswagen AG does not guarantee or accept any liability with respect to the correctness of information in this document. Copyright by Volkswagen AG.

Procedure

WARNING

Do not check or charge a Battery - A- when the visual indicator has »no color or is bright yellow«. Jump starting must not be used!

There is a risk of explosion during testing, charging or jump starting.

These Batteries - A- must be replaced.

Note

The Battery - A- temperature must be at least 10 °C.

Caution

- *Turn off the ignition and all electrical equipment.*
- *Remove the key.*

– Check the visual indicator on Batteries - A- with visual indicator. Refer to
⇒ “2.1.1 Battery with Color Display, Visual Indicator, Checking”, page 7 .

– Switch on the Battery Tester with Printer - VAS5097A- . Refer to
⇒ “2.4.2 Battery Tester with Printer VAS5097A Device Description”, page 13 .

– Determine the cold crank amps according to specifications on the Battery - A- in ampere (A) according to DIN and determine the Battery Tester With Printer - VAS5097A- adjustment range using the table. Refer to
⇒ “2.4.4 Cold Crank Amps Table”, page 15 .

Note

If the Battery - A- does not state this value in DIN but rather in IEC or EN/SAE, then convert the value using the table (refer to ⇒ “2.4.4 Cold Crank Amps Table”, page 15) or the table on the Battery Tester with Printer - VAS5097A- .

– Set the cold crank amps with the cold crank amps selector switch. Refer to
⇒ “2.4.2 Battery Tester with Printer VAS5097A Device Description”, page 13 .

– Set the measuring range (80 to 379 A or 380 to 499 A) using the ON/OFF switch. Refer to
⇒ “2.4.2 Battery Tester with Printer VAS5097A Device Description”, page 13 .

Note

Batteries - A- with cold crank amps greater than 499 A according to DIN can be tested with the setting for 499 A according to DIN.

Protected by copyright. Copying for private or commercial purposes, in part or on whole, is not permitted unless authorised by AUDI AG. Volkswagen AG does not guarantee or accept any liability with respect to the correctness of information in this document. Copyright by Volkswagen AG.

– Connect the red terminal (+) to the positive terminal of the Battery - A- .

– Connect the black terminal (-) to the negative terminal for the Battery - A- .

Note

- *Make sure the test terminals make good contact!*
- *Note TPL 2012182 for the Battery Tester with Printer - VAS5097A- .*

– Using the sliding switch, select the test clamp connection point. Refer to
⇒ “2.4.2 Battery Tester with Printer VAS5097A Device Description”, page 13 .

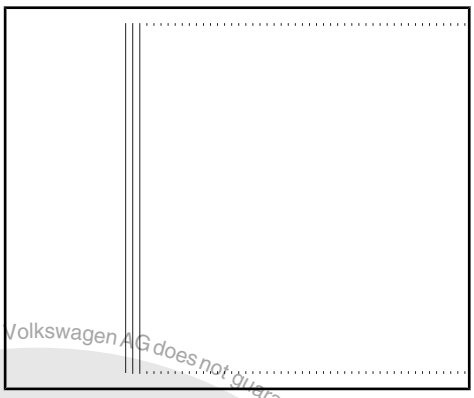

1 - Direct connection to the Battery - A-

2 - Connection on the battery jump start terminal

– Check if the cold crank amps indicated on the Battery - A- matches the selected value on the Battery Tester with Printer - VAS5097A- .

– Press the Start-button. Refer to
⇒ “2.4.2 Battery Tester with Printer VAS5097A Device Description”, page 13 .

The green LED lights up. Refer to
⇒ “2.4.2 Battery Tester with Printer VAS5097A Device Description”, page 13 . The test program runs automatically. The test results are output through the printer. Refer to
⇒ “2.4.5 Battery Load Test Results”, page 16 . If the Battery Tester with Printer - VAS5097A- does not start, (the LED does not come on and there is no print out), then charge the Battery - A- . Refer to ⇒ “3 Battery, Charging”, page 31 .

– Switch off the Battery Tester with Printer - VAS5097A- . Refer to
⇒ “2.4.2 Battery Tester with Printer VAS5097A Device Description”, page 13 .

– Remove the test terminals.

Note

- *The test is over after approximately 20 seconds.*
- *The results of the test are output through the printer.*
- *Only perform the test once. Repeating the test will not produce accurate results.*
- *The Battery Tester with Printer - VAS5097A- needs 30 minutes to cool off before it is ready for the next measurement.*

Protected by copyright. Copying for private or commercial purposes, in part or in whole, is not permitted unless authorised by Volkswagen AG. Volkswagen AG does not guarantee or accept any liability with respect to the correctness of information in this document. Copyright by Volkswagen AG.

2.4.4 Cold Crank Amps Table

Cold Crank Amps in A		
EN/ SAE	IEC	DIN
136 – 177	95 – 124	80 – 104
178 – 219	125 – 154	105 – 129
220 – 261	155 – 184	130 – 154
262 – 303	185 – 214	155 – 179

Cold Crank Amps in A		
EN/ SAE	IEC	DIN
304 – 345	215 – 244	180 – 204
346 – 387	245 – 274	204 – 229
388 – 429	275 – 304	230 – 254
430 – 471	305 – 334	255 – 279
472 – 513	335 – 364	280 – 304
514 – 555	365 – 394	305 –329
556 – 597	395 – 424	330 – 354
598 – 639	425 – 454	355 – 379
640 – 657	455 – 464	380 – 389
658 – 675	465 – 474	390 – 399
676 – 693	475 – 484	400 – 409
694 – 711	485 – 494	410 – 419
712 – 729	495 – 504	420 – 429
730 – 747	505 – 514	430 – 439
748 – 765	515 – 524	440 – 449
766 – 783	525 – 534	450 – 459
784 – 801	535 – 544	460 – 469
802 – 819	545 – 554	470 – 479
820 – 837	555 – 564	480 – 489
838 – 855	565 – 574	490 – 499. Refer to [2].

2) Batteries - A- with cold crank amps greater than 499 A according to DIN can be tested with the setting for 499 A according to DIN.

2.4.5 Battery Load Test Results

By placing the battery under a strong load during the Battery - A- load test, the battery voltage will be reduced.

- If the Battery - A- is good, the voltage drops only to the specified minimum voltage.
- If the Battery - A- is defective or weakly charged, the battery voltage will drop very quickly to below the specified minimum voltage.
- After testing, this low voltage level is maintained for a lengthy period and only increases again slowly.
- Only perform the test once. Repeating the test will not produce accurate results.
- In order to be able to test another/additional Battery - A- , the Battery Tester with Printer - VAS5097A- must cool down for approximately 30 minutes for the test result to be correct.

2.4.6 Printed Test Results Explanations

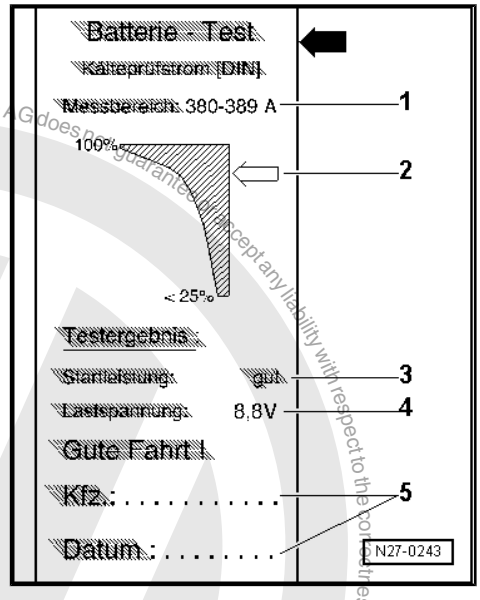

1 - Measuring range set on the Battery Tester with Printer - VAS5097A-

2 - Diagram, the -arrow- points to the Battery - A- status.

3 - Test result

4 - Battery - A- voltage during the battery load test.

5 - Vehicle data and date. For tester to fill out.

Note

- *The printed test results are required for warranty claims.*
- *Only perform the test once. Repeating the test will not produce accurate results.*

2.4.7 Test Result Evaluation

Printout	Measures
Starting power very good	Battery - A- is OK.
Starting power good	Battery - A- is OK.
Starting power sufficient	Evaluation performed by the current draw test. Refer to ⇒ "2.8 Current Draw Test", page 28 .
Starting power insufficient	Evaluation performed by the current draw test. Refer to ⇒ "2.8 Current Draw Test", page 28 .
Starting power very insufficient	Evaluation performed by the current draw test. Refer to ⇒ "2.8 Current Draw Test", page 28 .
Cannot be tested	– Charge the Battery - A- and perform the test again. Refer to ⇒ "3 Battery, Charging", page 31 .

Protected by copyright. Copyright by Volkswagen AG. Volkswagen AG does not guarantee or accept any liability with respect to the correctness of information in this document. Copyright by Volkswagen AG. Volkswagen AG is not permitted unless authorised by Volkswagen AG. Volkswagen AG does not guarantee or accept any liability with respect to the correctness of information in this document. Copyright by Volkswagen AG.

2.5 Battery Tester - VAS6161-

⇒ “2.5.1 General Information”, page 18

⇒ “2.5.2 Battery Tester VAS6161 Device Description”, page 19

⇒ “2.5.3 Battery Test, Performing using Battery Tester VAS6161 ”, page 19

⇒ “2.5.4 Maintenance Test, Performing”, page 20

⇒ “2.5.5 Service Test, Performing”, page 21

⇒ “2.5.6 Warranty Test, Performing”, page 22

⇒ “2.5.7 Explanation of Test Results”, page 22

⇒ “2.5.8 Test Result Evaluation”, page 22

2.5.1 General Information

WARNING

Risk of injury. Follow all warning messages and safety precautions. Refer to ⇒ “1.3 Warnings and Safety Precautions”, page 3 .

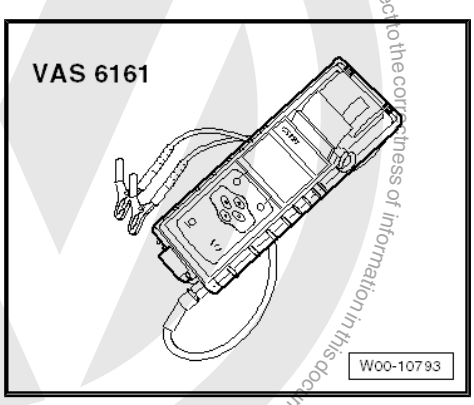

It is not necessary to disconnect or remove the Battery - A- when using the Battery Tester - VAS6161- .

The Battery Tester - VAS6161- does not charge the Battery - A- . It is working according to the principle of dynamic conductivity.

The Battery Tester - VAS6161- stores all battery types.

The data can be stored on an SD memory card.

The Battery Tester - VAS6161- can be updated via an interface or a SD card, so that all battery data from Volkswagen is always current.

The integrated infrared sensor (measuring the battery temperature) increases the quality of the measurements.

As an option, there is a scanner available, which can be used to read the bar code on the Battery - A- .

Note

Observe the Battery Tester - VAS6161- Operating Instructions.

- Battery Tester - VAS6161- device description. Refer to ⇒ “2.5.2 Battery Tester VAS6161 Device Description”, page 19 .
- Battery test. Refer to ⇒ “2.5.3 Battery Test, Performing using Battery Tester VAS6161 ”, page 19 .
- Maintenance test, performing. Refer to ⇒ “2.5.4 Maintenance Test, Performing”, page 20 .
- Service test, performing. Refer to ⇒ “2.5.5 Service Test, Performing”, page 21 .
- Warranty test, performing. Refer to ⇒ “2.5.6 Warranty Test, Performing”, page 22 .

Copyright by Volkswagen AG. Volkswagen AG does not guarantee or accept any liability with respect to the correctness of information in this document. Copyright by Volkswagen AG. Protected by copyright. Copying for private or commercial purposes, in part or in whole, is not permitted unless authorised by Volkswagen AG.

- Printed test results explanations. Refer to ⇒ “2.5.7 Explanation of Test Results”, page 22 .
- Test result evaluation. Refer to ⇒ “2.5.8 Test Result Evaluation”, page 22 .

2.5.2 Battery Tester - VAS6161- Device Description

Battery Tester - VAS6161-

1 - Internal printer

2 - Operating lever for the paper tray

3 - Paper slot

4 - Main menu display

5 - Control Field with ON/OFF Button (power), Cursor Buttons for Selecting

6 - Connection for the battery tester cable

7 - Slot for the SD memory card

8 - Infrared temperature sensor

9 - PC file transmitter

2.5.3 Battery Test, Performing using Battery Tester - VAS6161-

Special tools and workshop equipment required

- Battery Tester - VAS6161-

> ⚠ **WARNING**
>
> *Risk of injury. Follow all warning messages and safety precautions. Refer to* *⇒ “1.3 Warnings and Safety Precautions”, page 3* .

Procedure

> ⚠ **WARNING**
>
> *Do not check or charge a Battery - A- when the visual indicator has »no color or is bright yellow«. Jump starting must not be used!*
>
> *There is a risk of explosion during testing, charging or jump starting.*
>
> *These Batteries - A- must be replaced.*

Note

The Battery - A- temperature must be at least 10 °C.

– Turn off the ignition and all electrical consumers and remove the ignition key.

– Check the visual indicator on Batteries - A- with visual indicator. Refer to

Protected by copyright. Copying for private or commercial purposes, in part or in whole, is not permitted unless authorised by Volkswagen AG. Volkswagen AG does not guarantee or accept any liability with respect to the correctness of information in this document. Copyright by Volkswagen AG.

Protected by copyright. Copying for private or commercial purposes, in part or in whole, is not permitted unless authorised by Volkswagen AG. Volkswagen AG does not guarantee or accept any liability with respect to the correctness of information in this document. Copyright by Volkswagen AG.

⇒ “2.1.1 Battery with Color Display, Visual Indicator, Checking”, page 7 .

– Switch on the Battery Tester - VAS6161- . Refer to ⇒ “2.5.2 Battery Tester VAS6161 Device Description”, page 19 .

– Connect the red terminal (+) to the positive terminal of the Battery - A- .

– Connect the black terminal (-) to the negative terminal for the Battery - A- .

Note

Make sure the test terminals make good contact!

– Select one of the following:

♦ Maintenance test (only on new vehicles before becoming inventory). Refer to ⇒ “2.5.4 Maintenance Test, Performing”, page 20 .

♦ Service test. Refer to ⇒ “2.5.5 Service Test, Performing”, page 21 .

♦ Warranty test. Refer to ⇒ “2.5.6 Warranty Test, Performing”, page 22 .

Note

♦ *The test is over after approximately 10 seconds.*

♦ *The results of the test are output through the printer.*

♦ *The Battery Tester - VAS6161- does not have to cool down before taking the next measurement.*

– Switch off the Battery Tester - VAS6161- . Refer to ⇒ “2.5.2 Battery Tester VAS6161 Device Description”, page 19 .

– Remove the test terminals.

2.5.4 Maintenance Test, Performing

WARNING

Do not check or charge a Battery - A- when the visual indicator has »no color or is bright yellow«. Jump starting must not be used!

There is a risk of explosion during testing, charging or jump starting.

These Batteries - A- must be replaced.

Procedure

– Select “Maintenance Test”.

– Connect the scanner.

Note

If there is no scanner, manually enter the VIN on the printed test results.

- Scan the VIN.
- Select “at the battery pole” or “at the battery jump start terminal”.
- Section vehicle model.
- Scan the barcode or manually select the “type and manufacturer” in the menu.
- Determine the temperature above the Battery - A- . Hold the infrared sensor approximately 5 cm above the battery pole until the temperature is stable.
- Start the test.
- Print out the test notes.

2.5.5 Service Test, Performing

WARNING

Do not check or charge a Battery - A- when the visual indicator has »no color or is bright yellow«. Jump starting must not be used!

There is a risk of explosion during testing, charging or jump starting.

These Batteries - A- must be replaced.

Procedure

- Select “Service Test”.
- Select “at the battery pole” or “at the battery jump start terminal”.
- Section vehicle model.
- Determine the temperature above the Battery - A- . Hold the infrared sensor approximately 5 cm above the battery pole until the temperature is stable.
- Select battery type (Normal, AGM, 2*6 V or Gel).
- Select Norm (CCA, JIS, DIN, SAE, IEC or EN).
- Start the test.
- Print out the test notes.

Volkswagen AG does not guarantee or accept any liability with respect to the correctness of information in this document. Copyright by Volkswagen AG. Protected by copyright. Copying for private or commercial purposes, in part or in whole, is not permitted unless authorised by Volkswagen AG.

2.5.6 Warranty Test, Performing

> ⚠ **WARNING**
>
> ***Do not check or charge a Battery - A- when the visual indicator has »no color or is bright yellow«. Jump starting must not be used!***
>
> ***There is a risk of explosion during testing, charging or jump starting.***
>
> ***These Batteries - A- must be replaced.***

Procedure

– Select “Warranty Test”.
– Select “inside the vehicle” or “outside of the vehicle”.
– Select “at the battery pole” or “at the battery jump start terminal”.
– Section vehicle model.
– Determine the temperature above the Battery - A- . Hold the infrared sensor approximately 5 cm above the battery pole until the temperature is stable.
– Select battery type (Normal, AGM, 2*6 V or Gel).
– Select battery capacity.
– Start the test.
– Print out the test notes.

2.5.7 Explanation of Test Results

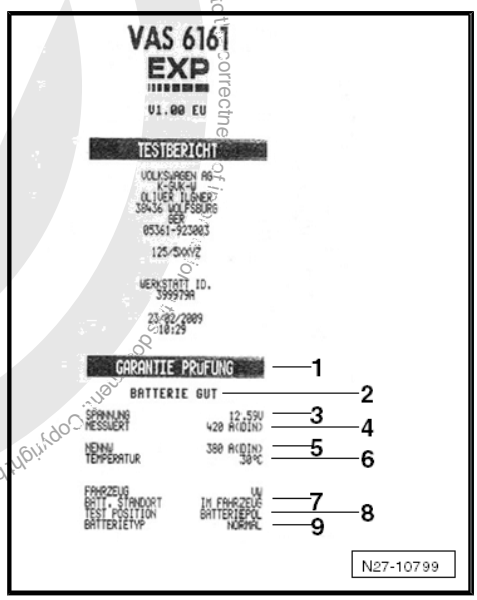

1 - Type of test
2 - Test result
3 - Measured voltage
4 - Battery - A- measured cold start value
5 - Battery - A- cold start value set on the Battery Tester - VAS6161-
6 - Temperature measured above the Battery - A-
7 - Battery - A- component location
8 - Battery terminal clamp position set on the Battery Tester - VAS6161-
9 - Selected battery type

Note

The printed test results are required for warranty claims.

2.5.8 Test Result Evaluation

Evaluating the battery test results for the Warranty and Service Tests

Battery test result	Measure
Battery - A- good	No measure on the Battery - A- .

Protected by copyright. Copying or private or commercial purposes, in part or in whole, is not permitted unless authorised by Volkswagen AG. Volkswagen AG does not guarantee or accept any liability with respect to the correctness of information. Copyright by Volkswagen AG.

Battery test result	Measure
Battery - A- good - recharge	– Charge the Battery - A- (refer to ⇒ “3 Battery, Charging”, page 31) and determine why the battery is discharging.
Perform a current draw test	– Perform a current draw test. Refer to ⇒ “2.8 Current Draw Test”, page 28 . – Charge the Battery - A- and perform the test again. Refer to ⇒ “3 Battery, Charging”, page 31 .
Battery - A- , replacing	– Disconnect the Battery - A- and perform the test again. The result “replace the battery” can occur due to a weak cable contact.
Battery cell faulty - replace	– Replace the Battery - A- . Refer to ⇒ Electrical Equipment; Rep. Gr. 27 ; Battery; Battery, Removing and Installing .
Check the connection	– Attach the test terminals directly to the Battery - A- and not to the battery jump start terminal.

Evaluating the battery test results for the Maintenance test

Battery test result	Measure
Battery - A- good	No measure
Battery - A- , charge immediately	– Charge the Battery - A- . Refer to ⇒ “3 Battery, Charging”, page 31 .
Mark as defective	– Mark the Battery - A- as “defective”.
Check the tester connection	– Disconnect the Battery - A- and perform the test again. The result “check the tester connection” can occur because the cable contact from the test terminals is weak.
Check the connection	– Attach the test terminals directly to the Battery - A- and not to the battery jump start terminal.
Noises	Wait until the measured value appears in the display.

Protected by copyright. Copying for private or commercial purposes, in part or in whole, is not permitted unless authorised by Volkswagen AG. Volkswagen AG does not guarantee or accept any liability with respect to the correctness of information in this document. Copyright by Volkswagen AG.

2.6 Midtronics Battery Tester - MCR340VKT-

⇒ “2.6.1 General Information”, page 24

⇒ “2.6.2 Midtronics Battery Tester MCR340VKT Device Description”, page 24

⇒ “2.6.3 Battery Test, Performing using Midtronics Battery Tester MCR340VKT ”, page 25

⇒ “2.6.4 Test Result Evaluation”, page 26

⇒ “2.6.5 Midtronics Battery Tester MCR340VKT Troubleshooting”, page 27

2.6.1 General Information

WARNING

Risk of injury. Follow all warning messages and safety precautions. Refer to ⇒ “1.3 Warnings and Safety Precautions”, page 3 .

Observe the Midtronics Battery Tester - MCR340VKT- Operating Instructions.

- Midtronics Battery Tester - MCR340VKT- device description. Refer to ⇒ “2.6.2 Midtronics Battery Tester MCR340VKT Device Description”, page 24 .
- Battery test. Refer to ⇒ “2.6.3 Battery Test, Performing using Midtronics Battery Tester MCR340VKT ”, page 25 .
- Troubleshooting. Refer to ⇒ “2.6.5 Midtronics Battery Tester MCR340VKT Troubleshooting”, page 27 .

2.6.2 Midtronics Battery Tester - MCR340VKT- Device Description

Only Volkswagen approved battery testers may be used to test Batteries - A- in Volkswagen vehicles. Use the Midtronics Battery Tester - MCR340VKT- in the USA and Canada.

Read all safety precautions and operating instructions in the Midtronics Battery Tester - MCR340VKT- .

Further information can be found under ⇒ Self Study Program No. 234 ; Battery .

The following charging and analysis procedures apply to all Batteries - A- , all battery installed locations (engine compartment or luggage compartment) and all battery purposes (for the starter or for the second/convenience battery).

Always observe the following points:

- Safety precautions
- Midtronics Battery Tester - MCR340VKT- set-up guidelines
- Display menu
- Display button and LED
- Procedure in the Midtronics Battery Tester - MCR340VKT- Operating Instructions

Protected by copyright. Copying for private or commercial purposes, in part or in whole, is not permitted unless authorised by Volkswagen AG. Volkswagen AG does not guarantee or accept any liability with respect to the correctness of information in this document. Copyright by Volkswagen AG.

2.6.3 Battery Test, Performing using Midtronics Battery Tester - MCR340VKT-

> **WARNING**
>
> *Risk of injury. Follow all warning messages and safety precautions. Refer to* *⇒ "1.3 Warnings and Safety Precautions", page 3* .

> **WARNING**
>
> *Do not check or charge a Battery - A- when the visual indicator has »no color or is bright yellow«. Jump starting must not be used!*
>
> *There is a risk of explosion during testing, charging or jump starting.*
>
> *These Batteries - A- must be replaced.*

Requirements

- Read the device description. Refer to ⇒ "2.6.2 Midtronics Battery Tester MCR340VKT Device Description", page 24 .
- Visually check the battery. Refer to ⇒ "2.2 Visual Inspection", page 9 .
- Open the hood or cover for other component locations of the Battery - A- .
- Select the battery type (standard or AGM).
- Remove the covers on the Battery - A- from the positive and negative terminals.
- Use a fender protector or some type of cover before using any equipment inside the engine compartment or inside the passenger compartment.
- Close all the doors.

Note

- *The Battery - A- temperature must be at least 10 °C.*
- *Refer to Midtronics Battery Tester - MCR340VKT- Operating Instructions.*

Procedure

> **WARNING**
>
> *Do not check or charge a Battery - A- when the visual indicator has »no color or is bright yellow«. Jump starting must not be used!*
>
> *There is a risk of explosion during testing, charging or jump starting.*
>
> *These Batteries - A- must be replaced.*

Protected by copyright. Copying for private or commercial purposes, in part or in whole is not permitted unless authorised by Volkswagen AG. Volkswagen AG does not guarantee or accept any liability with respect to the correctness of information in this document. Copyright by Volkswagen AG.

– Turn off the ignition and all electrical consumers and remove the ignition key.
– Check the visual indicator on Batteries - A- with visual indicator. Refer to
⇒ “2.1.1 Battery with Color Display, Visual Indicator, Checking”, page 7 .
– Switch on the Midtronics Battery Tester - MCR340VKT- . Refer to Midtronics Battery Tester - MCR340VKT- Operating Instructions.
– Connect the red terminal (+) to the positive terminal of the Battery - A- .
– Connect the black terminal (-) to the negative terminal for the Battery - A- .

Note

Make sure the test terminals make good contact!

– Select “warranty test” in the menu.
– Select “inside the vehicle” or “outside of the vehicle”.

Note

If the test results are needed to process a warranty claim, use the print function on the Midtronics Battery Tester - MCR340VKT- .

– Select the battery type (standard or AGM).
– Write down the Battery - A- DIN value taken from the battery label. If the label does not state a DIN value, then enter the SAE value.
– Enter the DIN value in the Midtronics Battery Tester - MCR340VKT- and perform a battery test. Refer to Midtronics Battery Tester - MCR340VKT- Operating Instructions.
– If using an SAE value, go to “other” in the menu and change “DIN” to “SAE”. Refer to the Midtronics Battery Tester - MCR340VKT- Operating Instructions.
– Switch off the Midtronics Battery Tester - MCR340VKT- .
– Remove the test terminals.

Note

Always use the DIN value on the battery label! Otherwise the test result will be incorrect.

2.6.4 Test Result Evaluation

Battery test results

Battery test result	Measure
Battery - A- good	None
Good - charge	– Charge the Battery - A- . Refer to ⇒ “3 Battery, Charging”, page 31 .

Copyright by Volkswagen AG. Volkswagen AG does not guarantee or accept any liability with respect to the correctness of information in this document. Copyright by Volkswagen AG. Volkswagen AG does not permit commercial use of, or copy or distribute, or make available to third parties, this document in whole or in part for commercial purposes, unless authorised by Volkswagen AG.

Battery test result	Measure
Use Incharge	– Charge the Battery - A- . Refer to ⇒ “3 Battery, Charging”, page 31 .
Battery - A- , replacing	– Replace the Battery - A- . Refer to ⇒ Electrical Equipment; Rep. Gr. 27 ; Battery; Battery, Removing and Installing .
Battery cell defective	– Replace the Battery - A- . Refer to ⇒ Electrical Equipment; Rep. Gr. 27 ; Battery; Battery, Removing and Installing .

2.6.5 Midtronics Battery Tester - MCR340VKT- Troubleshooting

Sometimes the display shows the malfunction or the messages based on the condition.

The following is a list of the most frequent displayed messages together with suggested solutions.

Refer to the Midtronics Battery Tester - MCR340VKT- Operating Instructions for any messages not listed.

Display Message	Measure
No display	– Make sure the Midtronics Battery Tester - MCR340VKT- test terminals are attached securely to the battery terminals. – Make sure the battery poles are tightened to the tightening specification (refer to ⇒ Electrical Equipment; Rep. Gr. 27 ; Overview - Battery) and are not corroded. – Charge the Battery - A- . Refer to ⇒ “3 Battery, Charging”, page 31 .
System noises	– Switch off all electrical consumers. – Wait until all electrical equipment, which are monitored by the Vehicle Electrical System Control Module - J519- , are switched off. – Remove the key. – Disconnect any doubtful or standard production electrical equipment from the vehicle electrical system.

– Wait a few minutes and then check again. Refer to ⇒ “2.6.3 Battery Test, Performing using Midtronics Battery Tester MCR340VKT ”, page 25 .

Protected by copyright. Copying for private or commercial purposes, in part or in whole, is not permitted unless authorised by Volkswagen AG. Volkswagen AG does not guarantee or accept any liability with respect to the correctness of information in this document. Copyright by Volkswagen AG.

Note

If the test was performed at the battery jump start terminal and the message still does not go away, then perform the test directly on the Battery - A- .

2.7 Battery Test with Vehicle Diagnostic Tester

Special tools and workshop equipment required

- Vehicle Diagnostic Tester

The Battery - A- can also be checked using the Vehicle Diagnostic Tester when it is installed and without being connected to a battery charger.

Test Prerequisites

- No battery charger connected
- Battery - A- is connected.
- Battery temperature at least +10 °C (50 °F).

Procedure

– Connect the Vehicle Diagnostic Tester . Refer to ⇒ “1.2 Connect the Vehicle Diagnostic Tester ”, page 89 .

– Select `Guided Fault Finding`.

– Use the `GO TO` button to select the “function/component selection” and the following menu options one after the other:

- Body
- Electrical Equipment
- 01 - OBD-capable systems
- 61 - battery monitoring

– Follow the instructions in the display.

2.8 Current Draw Test

WARNING

Do not check or charge a Battery - A- when the visual indicator has »no color or is bright yellow«. Jump starting must not be used!

There is a risk of explosion during testing, charging or jump starting.

These Batteries - A- must be replaced.

Make sure the correct charging mode is set on the battery charger so the current draw test is not inaccurate.

- Battery Charger - VAS5095A- . Refer to ⇒ “3.1.3 Battery, Charging with Battery Charger VAS5059A ”, page 32 .
- Battery Charger - VAS5900- . Refer to ⇒ “3.2 Battery Charger VAS5900 ”, page 37 .
- Battery Charger - VAS5903- . Refer to ⇒ “3.3 Battery Charger VAS5903 ”, page 48 .

Protected by copyright. Copying for private or commercial purposes, in part or in whole, is not permitted unless authorised by Volkswagen AG. Volkswagen AG does not guarantee or accept any liability with respect to the correctness of information in this document. Copyright by Volkswagen AG.

In order to receive an indication as quickly as possible of the battery condition of discharged Batteries - A- , a conclusion can be made during the charging process using the Battery - A- current draw as to whether the Battery - A- should be replaced or charged completely.

Note

In the case of the Battery Tester - VAS6161- , the current draw test must always be conducted when the test result "conduct current draw test" appears in the display.

The current draw test should always be performed if the test using the Battery Tester with Printer - VAS5097A- had the following results:

1 - Starting power sufficient

2 - Starting power insufficient

3 - Starting power very insufficient

4 - cannot be tested - charge the Battery - A- and perform the test again

5 - Battery Tester with Printer - VAS5097A- does not turn on (no LED, no printout)

Depending on the test results Battery Tester with Printer - VAS5097A- (refer to ⇒ "2.4.7 Test Result Evaluation", page 17), additional test steps or work for a clear evaluation of the battery charge must be made.

By checking a current draw capacity on a Battery - A- during the charging procedure, it can be determined in a short time whether a partially discharged or severely discharged Battery - A- can become operable again by further charging. Refer to ⇒ "3.7 Severely Discharged Batteries", page 68 .

Test Prerequisites

- When charging a battery, the temperature of the battery must be at least 10 °C.
- The charger must be able to deliver at least 30 A charge current, such as on the Battery Charger - VAS5095A- / Battery Charger - VAS5900- / Battery Charger - VAS5903- .
- When charging with the Battery Charger - VAS5095A- , the Battery - A- current draw must be measured using a current probe (Test Instrument Set - Current Clamp - 100A - VAS6356/4A-).
- The Battery Charger - VAS5900- and the Battery Charger - VAS5903- indicate the current draw. The Battery Charger - VAS5900- automatically performs the menu- guided current draw test.

Procedure

– Connect the Battery - A- to the Battery Charger and start the charging process.

– Measure the Battery - A- charge current after five minutes.

Test Result

The charge current must be above 10% of the nominal capacity 5 minutes after charging begins.

Protected by copyright. Copying for private or commercial purposes, in part or in whole, is not permitted unless authorised by Volkswagen AG. Volkswagen AG does not guarantee or accept any liability with respect to the correctness of information in this document. Copyright by Volkswagen AG.

Example:

With a 60 Ah battery, the charge current must be greater than 6 A 5 minutes after charging begins.

– Charge the Battery - A- completely when the charge current is greater than 10% of the nominal capacity.

– Let the Battery - A- sit for two hours and then perform the battery load test. Refer to ⇒ “2.4.3 Battery Load Test”, page 13 .

If the charge current is less than 10% of the nominal capacity (less than 6 A for a 60 Ah battery) five minutes after starting the charging, then replace the Battery - A- . Refer to ⇒ Electrical Equipment; Rep. Gr. 27 ; Battery; Battery, Removing and Installing .

– In warranty and Goodwill cases, fill out the battery test sheet and keep it with the Battery - A- .

2.9 Battery, Checking Resting Voltage, Vehicles in Storage or Inventory

Special tools and workshop equipment required

♦ Analog/Digital Multimeter - FLU83III-

> ⚠ **WARNING**
>
> ***Risk of injury. Follow all warning messages and safety precautions. Refer to ⇒ “1.3 Warnings and Safety Precautions”, page 3 .***

The resting voltage may only be measured on vehicles in storage or inventory within the scope of the prescribed maintenance and care work as an assessment criteria for the Battery - A- condition.

The resting voltage measurement serves to determine whether it is necessary to recharge the Battery - A- on vehicles in storage or inventory. Refer to Maintenance Tables “Service for Vehicles in Storage or Inventory”.

Test Conditions

The Battery - A- may not be charged or discharged for at least two days.

Procedure

– Measure the Battery - A- resting voltage using the Analog/Digital Multimeter - FLU83III- .

Test result

No Load Voltage	Charge Level	Battery - A- Charge
11.60 V	0 %	Discharged. Performance capacity diminished completely. Charging totally discharged batteries. Refer to ⇒ “3.7 Severely Discharged Batteries”, page 68 .

Measured Value	Required Actions
Resting voltage greater than or equal to 12.5 V	Resting voltage OK
Resting voltage lower than 12.5 V	– Charge the Battery - A- . Refer to ⇒ “3 Battery, Charging”, page 31 .

Copyright by Volkswagen AG. Volkswagen AG does not guarantee or accept any liability with respect to the correctness of information in this document. Copying for private or commercial purposes, in part or in whole, is not permitted unless authorised by Volkswagen AG.

3 Battery, Charging

⇒ "3.1 Battery Charger VAS5095A ", page 31

⇒ "3.2 Battery Charger VAS5900 ", page 37

⇒ "3.3 Battery Charger VAS5903 ", page 48

⇒ "3.4 Battery Charger VAS5906 ", page 59

⇒ "3.5 Battery Tester Charger Kit GRX3000VAS ", page 61

⇒ "3.6 Solar Battery Maintainer VAS6102A ", page 67

⇒ "3.7 Severely Discharged Batteries", page 68

3.1 Battery Charger - VAS5095A-

⇒ "3.1.1 General Information", page 31

⇒ "3.1.2 Battery Charger VAS5059A Device Description", page 32

⇒ "3.1.3 Battery, Charging with Battery Charger VAS5059A ", page 32

⇒ "3.1.4 Severely Discharged Battery, Charging with Battery Charger VAS5059A ", page 34

⇒ "3.1.5 Battery Charger VAS5059A Support Mode", page 34

⇒ "3.1.6 Battery Charger VAS5059A Maintenance Charging", page 36

3.1.1 General Information

> ⚠ WARNING
>
> *Risk of injury. Follow all warning messages and safety precautions. Refer to ⇒ "1.3 Warnings and Safety Precautions", page 3 .*
>
> *In order to prevent damage to the Battery - A- or vehicle, observe the battery type information. Refer to ⇒ "1.1 Battery Types", page 1 .*

> ⚠ WARNING
>
> *Do not check or charge a Battery - A- when the visual indicator has »no color or is bright yellow«. Jump starting must not be used!*
>
> *There is a risk of explosion during testing, charging or jump starting.*
>
> *These Batteries - A- must be replaced.*

The charge current cannot be read on the Battery Charger - VAS5095A- . The charge current must be measured externally with a current probe (Test Instrument Set - Current Clamp - 100A - VAS6356/4A-).

Observe the Battery Charger - VAS5095A- Operating Instructions.

- Battery Charger - VAS5095A- device description. Refer to ⇒ "3.1.2 Battery Charger VAS5059A Device Description", page 32 .

Protected by copyright. Copyright by Volkswagen AG. Volkswagen AG does not guarantee or accept any liability with respect to the correctness of information in this document. Copyright by Volkswagen AG.

Copyright by Volkswagen AG. Volkswagen AG does not guarantee or accept any liability with respect to the correctness of information in this document. Copying for private or commercial purposes, in whole or in part, is not permitted unless authorised by Volkswagen AG.

- Charge the Battery - A- . Refer to
  ⇒ “3.1.3 Battery, Charging with Battery Charger VAS5059A ”, page 32 .
- Severely discharged Battery - A- , charging. Refer to
  ⇒ “3.1.4 Severely Discharged Battery, Charging with Battery Charger VAS5059A ”, page 34 .
- Support mode. Refer to
  ⇒ “3.1.5 Battery Charger VAS5059A Support Mode”, page 34 .
- Buffer mode/maintenance charging. Refer to
  ⇒ “3.1.6 Battery Charger VAS5059A Maintenance Charging”, page 36 .

3.1.2 Battery Charger - VAS5059A- Device Description

The Battery Charger - VAS5095A- is designed to charge all 12 V Batteries - A- in the VW group.

The battery is charged without amperage or voltage surges. Thereby the on-board electronics will not be affected. It is not necessary to remove the Battery - A- from the vehicle or be disconnected from the electrical system during charging.

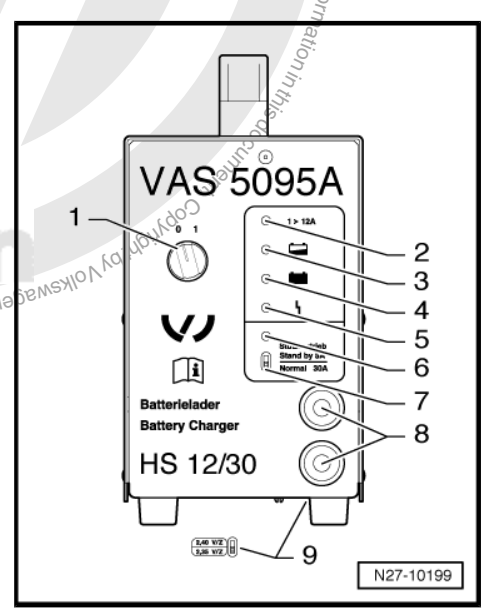

Battery Charger - VAS5095A-

1 - `ON/OFF`-Switch (0 = OFF)

2 - Charge current display (I greater than 12 A)

3 - Battery - A- charge current display, partially charged (greater than 90 %)

4 - Maintenance charging, lights up green when the Battery - A- is charged

5 - Interference indicator

6 - Support mode indicator

7 - `Support Mode/Normal Mode` selector switch

8 - Charge cable: red charging clamp (+), black charging clamp (-)

9 - `Battery Type` change switch (on the bottom of the unit)

3.1.3 Battery, Charging with Battery Charger - VAS5059A-

Special tools and workshop equipment required

- Battery Charger - VAS5095A-

> ⚠ **WARNING**
>
> *Risk of injury. Follow all warning messages and safety precautions. Refer to ⇒ “1.3 Warnings and Safety Precautions”, page 3 .*

> ⚠ **Caution**
>
> *While charging, always set the battery type to 2.4 V/C (Volts/ Battery Cell). This applies to all Batteries - A- .*

Note

The Battery - A- temperature must be at least 10 °C.

WARNING

Do not check or charge a Battery - A- when the visual indicator has »no color or is bright yellow«. Jump starting must not be used!

There is a risk of explosion during testing, charging or jump starting.

These Batteries - A- must be replaced.

Procedure

– Turn off the ignition and all electrical consumers and remove the ignition key.

– Check the battery type setting on the `battery type` switch. Refer to ⇒ "3.1.2 Battery Charger VAS5059A Device Description", page 32 . The `battery type` switch must be set to 2.4V/C (Volts/Battery Cell).

– Connect the red charge terminal (+) to the positive terminal of the Battery - A-.

Note

On vehicles with a Start/Stop function and an installed Battery Monitoring Control Module - J367- , the black charge terminal (-) must be connected to the body ground. The Start/Stop system will malfunction when it is connected to the Battery - A- negative terminal.

– Connect the black charge terminal (-) to the negative terminal of the Battery - A- /negative connector.

– Switch on the Battery Charger - VAS5095A- . Refer to ⇒ "3.1.2 Battery Charger VAS5059A Device Description", page 32 .

Charge current displays. Refer to ⇒ Fig. "" Battery Charger -VAS5095A- "" , page 32 -2- and -3- light up yellow. The Battery - A- is partially charged (approximately 90 %) when only the yellow LED -3- is on.

If the green LED. Refer to ⇒ Fig. "" Battery Charger -VAS5095A- "" , page 32 -4- is also on, then the Battery Charger - VAS5095A- has switched to maintenance charging. The Battery - A- is charged.

– Switch off the Battery Charger - VAS5095A- . Refer to ⇒ "3.1.2 Battery Charger VAS5059A Device Description", page 32 .

– Remove the charging clamps from the battery terminals.

Protected by copyright. Copyright by Volkswagen AG. Volkswagen AG does not guarantee or accept any liability with respect to the correctness of information in this document. Copyright by Volkswagen AG. Volkswagen AG, is not permitted unless authorised. Unauthorised use or publication of any part of this document or parts thereof for private or commercial purposes is not permitted.

3.1.4 Severely Discharged Battery, Charging with Battery Charger - VAS5059A-

WARNING

Risk of injury. Follow all warning messages and safety precautions. Refer to ⇒ "1.3 Warnings and Safety Precautions", page 3 .

The Battery Charger - VAS5095A- automatically detects severely discharged Batteries - A- and starts the charging process conservatively with a low charge current. The charge current is automatically adjusted to the battery charge state.

- For information in the chapter. Refer to ⇒ "3.7 Severely Discharged Batteries", page 68 .
- The battery voltage must be at least 0.6 V!
- Severely discharged Batteries - A- in vehicles must be replaced prior to delivery. Pre-existing damage cannot be ruled out.

WARNING

Do not check or charge a Battery - A- when the visual indicator has »no color or is bright yellow«. Jump starting must not be used!

There is a risk of explosion during testing, charging or jump starting.

These Batteries - A- must be replaced.

Procedure

– Charge the Battery - A- . Refer to ⇒ "3.1.3 Battery, Charging with Battery Charger VAS5059A ", page 32 .

3.1.5 Battery Charger - VAS5059A- Support Mode

Special tools and workshop equipment required

- Battery Charger - VAS5095A-

General Information

The support mode provides the vehicle electrical system with voltage when the Battery - A- is removed or disconnected.

For more information. Refer to the Battery Charger - VAS5095A- Operating Instructions.

The support mode is used for the following situations:

- Vehicle electrical system support mode with the Battery - A- not installed
- Maintaining the voltage when the battery is being replaced
- Systems test without the Battery - A-

Protected by copyright. Copying for private or commercial purposes, in part or in whole, is not permitted unless authorised by Volkswagen AG. Volkswagen AG does not guarantee or accept any liability with respect to the correctness of information in this document. Copyright by Volkswagen AG.

WARNING

Risk of injury. Follow all warning messages and safety precautions. Refer to ⇒ "1.3 Warnings and Safety Precautions", page 3 .

WARNING

Do not check or charge a Battery - A- when the visual indicator has »no color or is bright yellow«. Jump starting must not be used!

There is a risk of explosion during testing, charging or jump starting.

These Batteries - A- must be replaced.

Procedure

Caution

- *The polarity protection of the charger clamps is not active in the operation mode "charging severely discharged batteries/Support mode". Connect the charger clamps to the battery terminals correctly according to polarity!*
- *It can result in sparks due to short circuit.*
- *This constitutes an explosion risk.*
- *Make sure the charging clamp connections are secure.*

– Remove the Battery - A- . Refer to ⇒ Electrical Equipment; Rep. Gr. 27 ; Battery; Battery, Removing and Installing .

Caution

Whenever the Battery - A- is removed, be careful to prevent contact between the connected charge clamp on the positive terminal and the body ground. Likewise prevent contact between the battery terminals.

– Clamp the red charging clamp (+) to the vehicle positive battery terminal.

Note

On vehicles with a Start/Stop function and an installed Battery Monitoring Control Module - J367- , the black charge terminal (-) must be connected to the body ground. The Start/Stop system will malfunction when it is connected to the Battery - A- negative terminal.

– Attach the black charging clamp (-) to the vehicle battery negative terminal.

– Check the setting for the `support mode/standard operation` switch. Refer to ⇒ "3.1.2 Battery Charger VAS5059A Device Description", page 32 . "Support mode" must be on.

Protected by copyright. Copyright by Volkswagen AG. Volkswagen AG does not guarantee or accept any liability with respect to the correctness of information in this document. Copyright by Volkswagen AG.

– Check correct polarity connection of charger clamps.

– Switch on the Battery Charger - VAS5095A- . Refer to ⇒ “3.1.2 Battery Charger VAS5059A Device Description”, page 32 .

The Battery Charger - VAS5095A- starts the support mode.

End the Battery Support Mode

– Switch off the Battery Charger - VAS5095A- . Refer to ⇒ “3.1.2 Battery Charger VAS5059A Device Description”, page 32 .

– Remove the charging clamps from the battery terminals.

– Disconnect the Battery Charger - VAS5095A- from the power.

3.1.6 Battery Charger - VAS5059A- Maintenance Charging

WARNING

Risk of injury. Follow all warning messages and safety precautions. Refer to ⇒ “1.3 Warnings and Safety Precautions”, page 3 .

WARNING

Do not check or charge a Battery - A- when the visual indicator has »no color or is bright yellow«. Jump starting must not be used!

There is a risk of explosion during testing, charging or jump starting.

These Batteries - A- must be replaced.

In maintenance charging, the Battery Charger - VAS5095A- provides safe charging and preserves the charge of the Battery - A- .

Procedure

– Proceed as if charging the Battery - A- . Refer to ⇒ “3.1.3 Battery, Charging with Battery Charger VAS5059A ”, page 32 .

If the Battery - A- is discharged by an electrical consumer during maintenance charging, the Battery Charger - VAS5095A- automatically supplies the appropriate charge.

Maintenance charging can be performed without time restrictions. The Battery - A- can be used constantly.

Protected by copyright. Copying for private or commercial purposes, in part or in whole, is not permitted unless authorised by Volkswagen AG. Volkswagen AG does not guarantee or accept any liability with respect to the correctness of information in this document. Copyright by Volkswagen AG.

3.2 Battery Charger - VAS5900-

⇒ "3.2.1 General Information", page 37

⇒ "3.2.2 Battery Charger VAS5900 Device Description", page 38

⇒ "3.2.3 Battery, Charging with Battery Charger VAS5900 ", page 38

⇒ "3.2.4 Battery Charger VAS5900 Service Charge", page 40

⇒ "3.2.5 Severely Discharged Battery, Charging with Battery Charger VAS5900 ", page 43

⇒ "3.2.6 Battery Charger VAS5900 Support Mode", page 44

⇒ "3.2.7 Battery Charger VAS5900 Maintenance Charging", page 46

3.2.1 General Information

> ⚠ WARNING
>
> *Risk of injury. Follow all warning messages and safety precautions. Refer to ⇒ "1.3 Warnings and Safety Precautions", page 3 .*

> ⚠ WARNING
>
> *Do not check or charge a Battery - A- when the visual indicator has »no color or is bright yellow«. Jump starting must not be used!*
>
> *There is a risk of explosion during testing, charging or jump starting.*
>
> *These Batteries - A- must be replaced.*

The effective charge current for the Battery Charger - VAS5900- can be read directly on the Battery Charger - VAS5900- .

Observe the Battery Charger - VAS5900- Operating Instructions.

- Battery Charger - VAS5900- device description. Refer to ⇒ "3.2.2 Battery Charger VAS5900 Device Description", page 38 .
- Charge the Battery - A- . Refer to ⇒ "3.2.3 Battery, Charging with Battery Charger VAS5900 ", page 38 .
- Service charge. Refer to ⇒ "3.2.4 Battery Charger VAS5900 Service Charge", page 40 .
- Severely discharged Battery - A- , charging. Refer to ⇒ "3.2.5 Severely Discharged Battery, Charging with Battery Charger VAS5900 ", page 43 .
- Support mode. Refer to ⇒ "3.2.6 Battery Charger VAS5900 Support Mode", page 44 .
- Maintenance charging. Refer to ⇒ "3.2.7 Battery Charger VAS5900 Maintenance Charging", page 46 .

Copyright by Volkswagen AG. Protected by copyright. Copying or private or commercial purposes, in part or in whole, is not permitted unless authorised by Volkswagen AG. Volkswagen AG does not guarantee or accept any liability with respect to the correctness of information in this document.

3.2.2 Battery Charger - VAS5900- Device Description

The Battery Charger - VAS5900- is designed to charge all 12 V Batteries - A- in the VW group.

Battery Charger - VAS5900-

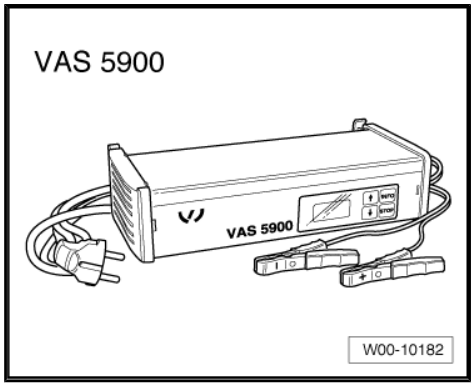

Control field overview

1 - Display

2 - ↑-button “Up”

3 - ↓-button “Down”

4 - START/STOP-button

5 - INFO-button

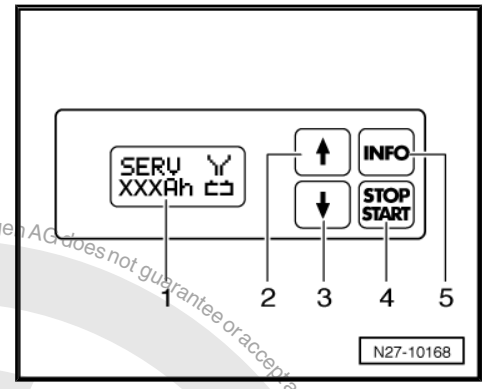

3.2.3 Battery, Charging with Battery Charger - VAS5900-

Special tools and workshop equipment required

- Battery Charger - VAS5900-

WARNING

Risk of injury. Follow all warning messages and safety precautions. Refer to ⇒ “1.3 Warnings and Safety Precautions”, page 3 .

WARNING

Do not check or charge a Battery - A- when the visual indicator has »no color or is bright yellow«. Jump starting must not be used!

There is a risk of explosion during testing, charging or jump starting.

These Batteries - A- must be replaced.

Note

The Battery - A- temperature must be at least 10 °C.

Protected by copyright. Copying for private or commercial purposes, in part or in whole, is not permitted unless authorised by Volkswagen AG. Volkswagen AG does not guarantee or accept any liability with respect to the correctness of information in this document. Copyright by Volkswagen AG.

Protected by copyright. Copyright by Volkswagen AG. Volkswagen AG does not guarantee or accept any liability with respect to the correctness of information in this document. Copying for private or commercial purposes, in part or in whole, is not permitted unless authorised by Volkswagen AG.

Procedure

– Turn off the ignition and all electrical consumers and remove the ignition key.

– Connect the Battery Charger - VAS5900- to the power supply. The last selected mode is shown on the display. Refer to ⇒ “3.2.2 Battery Charger VAS5900 Device Description”, page 38 .

– Set the battery type with the INFO button.

The symbol -1- for “standard charge of wet batteries” or the symbol -2- for “standard charge of Gel/Absorbent Glass Mat (AGM) batteries” is indicated in the display.

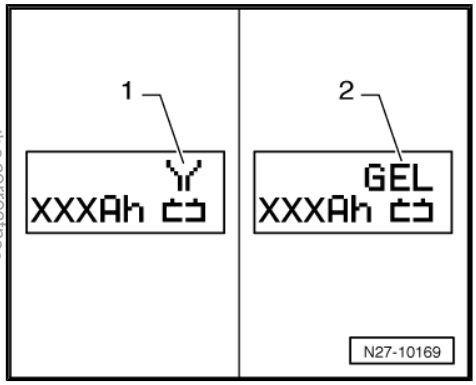

– Set the battery capacity (Ah) on the Battery - A- to be charged with the corresponding ↑ button or ↓ button.

– Connect the red charge terminal (+) to the positive terminal of the Battery - A- .

Note

On vehicles with a Start/Stop function and an installed Battery Monitoring Control Module - J367- , the black charge terminal (-) must be connected to the body ground. The Start/Stop system will malfunction when it is connected to the Battery - A- negative terminal.

– Connect the black charge terminal (-) to the negative terminal of the Battery - A- /negative connector.

The Battery Charger - VAS5900- recognizes the nominal voltage of the connected Battery - A- (6 V/12 V/24 V) and begins the charging process automatically.

The Battery Charger - VAS5900- begins the “final charging” when the charge level is approximately 80 to 85 %. The fourth bar is indicated on the display -1-. The Battery - A- is ready to be used.

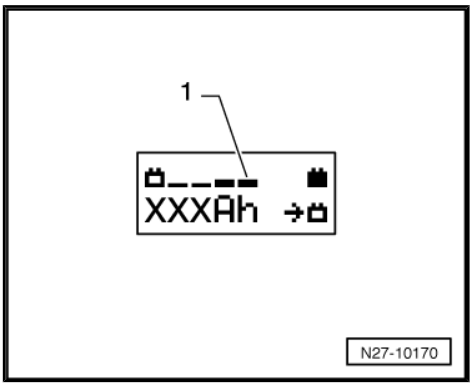

With a charge status of 100 %, all bars are indicated on the display -1-.

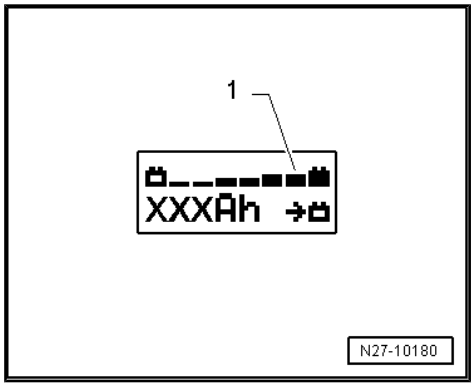

With the “standard charge”, parallel operation of electrical consumers during the charging process is possible. The charging time is lengthened by this.

Depending on the battery type, the Battery Charger - VAS5900- switches to maintenance charging after 1 to 7 hours. To reach a 100% charge level, the Battery - A- should remain connected to the Battery Charger - VAS5900- .

Possible malfunctions and how they are handled

1 - Displayed voltage does not match the nominal voltage:

– Hold down the [↑] button or [↓] button until the charging process begins.

2 - Displayed battery voltage does not match the nominal voltage - the charging process has already begun:

– Press the [START/STOP] button two times.

– Hold down the [↑] button or [↓] button until the charging process begins again.

3 - The Battery Charger - VAS5900- does not recognize the Battery - A-, if the battery voltage is less than 2V:

The display remains unchanged.

The selected battery type and Ampere hours (Ah) are displayed.

Battery - A- charging, ending

– Press the [START/STOP]-button.

– Remove the charging clamps from the battery terminals.

– Disconnect the Battery Charger - VAS5900- from the power.

3.2.4 Battery Charger - VAS5900- Service Charge

Special tools and workshop equipment required

♦ Battery Charger - VAS5900-

WARNING

Risk of injury. Follow all warning messages and safety precautions. Refer to ⇒ “1.3 Warnings and Safety Precautions”, page 3 .

Caution

“Service charging” is not permitted for VW vehicles, because voltage surges can damage the on-board electronics.

The Battery - A- must always be disconnected from the vehicle electrical system when using the “service charge” mode.

© Volkswagen AG does not guarantee or accept any liability with respect to the correctness of information in this document. Copyright by Volkswagen AG. Reproduction, copy, publication, or communication to third parties, in whole or in part, is not permitted unless authorised by Volkswagen AG.

WARNING

Do not check or charge a Battery - A- when the visual indicator has »no color or is bright yellow«. Jump starting must not be used!

There is a risk of explosion during testing, charging or jump starting.

These Batteries - A- must be replaced.

Caution

Always set the mode that corresponds to the Battery - A- during the charging process. Refer to the Battery Charger - VAS5900- Operating Instructions.

"Service Charging" is suitable for:

- *Wet batteries having a visual indicator which allows charging (visual indicator black or green).*

The "Service charge (SERV)" mode is only used with sulfated Batteries - A-. The Battery - A- with voltages greater than 14.4 V is charged. A partial removal of the sulfation layer can result from this. Check the visual indicator after charging, immediately before the Battery - A- is used. Refer to
⇒ "2.3 Color Display in Battery Cover, Checking, Visual Indicator", page 10 .

Note

The Battery - A- temperature must be at least 10 °C.

Procedure

– Turn off the ignition and all electrical consumers and remove the ignition key.

– Connect the Battery Charger - VAS5900- to the power supply. The last selected mode is shown on the display. Refer to
⇒ "3.2.2 Battery Charger VAS5900 Device Description", page 38 .

Protected by copyright. Copying for private or commercial purposes, in part or in whole, is not permitted unless authorised by Volkswagen AG. Volkswagen AG does not guarantee or accept any liability with respect to the correctness of information in this document. Copyright by Volkswagen AG.

– Set the battery type with the INFO button.

The symbol -1- for “service charge of wet batteries” or the symbol -2- for “service charge of Gel/Absorbent Glass Mat (AGM) batteries” is indicated in the display.

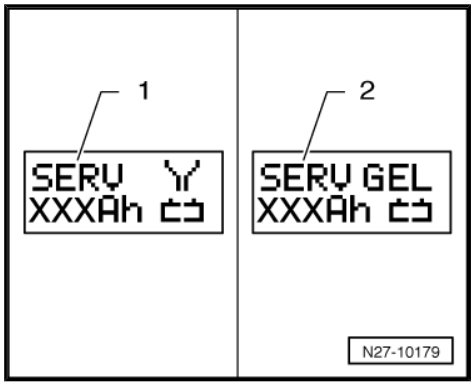

– Set the battery capacity (Ah) on the Battery - A- to be charged with the corresponding ↑ button or ↓ button.

– Connect the red charge terminal (+) to the positive terminal of the Battery - A- .

Note

On vehicles with a Start/Stop function and an installed Battery Monitoring Control Module - J367- , the black charge terminal (-) must be connected to the body ground. The Start/Stop system will malfunction when it is connected to the Battery - A- negative terminal.

– Connect the black charge terminal (-) to the negative terminal of the Battery - A- /negative connector.

The Battery Charger - VAS5900- recognizes the nominal voltage of the connected Battery - A- (6 V/12 V/24 V) and begins the charging process automatically.

The Battery Charger - VAS5900- begins the “final charging” when the charge level is approximately 80 to 85% of the battery voltage. The fourth bar is indicated on the display -1-. The Battery - A- is now ready to be used.

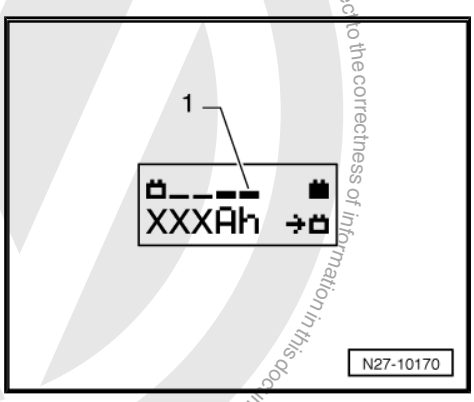

Note

A successful “service charge” depends on the degree of sulfation on the Battery - A- .

Possible malfunctions and how they are handled

1 - Displayed voltage does not match the nominal voltage:

– Hold down the ↑ button or ↓ button until the charging process begins.

2 - Displayed battery voltage does not match the nominal voltage - the charging process has already begun:

– Press the START/STOP button two times.

– Hold down the ↑ button or ↓ button until the charging process begins.

3 - The charger does not recognize a Battery - A- , when the battery voltage is less than 2 V:

The display remains unchanged.

The set operating mode and Ampere-hours (Ah) are displayed.

Battery - A- charging, ending

– Press the START/STOP-button.

– Remove the charging clamps from the battery terminals.

– Disconnect the Battery Charger - VAS5900- from the power.

Protected by copyright. Copying for private or commercial purposes, in part or in whole, is not permitted unless authorised by Volkswagen AG. Volkswagen AG does not guarantee or accept any liability with respect to the correctness of information in this document. Copyright by Volkswagen AG.

3.2.5 Severely Discharged Battery, Charging with Battery Charger - VAS5900-

Special tools and workshop equipment required

- Battery Charger - VAS5900-

> **WARNING**
>
> *Risk of injury. Follow all warning messages and safety precautions. Refer to* *⇒ "1.3 Warnings and Safety Precautions", page 3* *.*

> **WARNING**
>
> *Do not check or charge a Battery - A- when the visual indicator has »no color or is bright yellow«. Jump starting must not be used!*
>
> *There is a risk of explosion during testing, charging or jump starting.*
>
> *These Batteries - A- must be replaced.*

> **Caution**
>
> - *The polarity protection of the charger clamps is not active in the operation mode "charging severely discharged batteries/Support mode". Connect the charger clamps to the battery terminals correctly according to polarity!*
> - *Always set the mode that corresponds to the Battery - A- during the charging process. Refer to the Battery Charger - VAS5900- Operating Instructions.*
> - *The Battery Charger - VAS5900- does not recognize the severely discharged Battery - A- . Refer to* *⇒ "3.7 Severely Discharged Batteries", page 68* *.*
> - *Do not touch* START/STOP *button when battery cables are incorrectly connected! The Battery Charger - VAS5900- can become damaged.*

The Battery Charger - VAS5900- will not automatically recognize the Battery - A- for Batteries - A- with a voltage less than 2 V.

Note

- *For information. Refer to the chapter* *⇒ "3.7 Severely Discharged Batteries", page 68* *.*
- *The Battery - A- temperature must be at least 10 °C.*
- *Severely discharged batteries in vehicles must be replaced prior to delivery. Pre-existing damage cannot be ruled out.*

Procedure

– Turn off the ignition and all electrical consumers and remove the ignition key.

– Connect the Battery Charger - VAS5900- to the power supply. The last selected mode is shown on the display. Refer to

Protected by copyright. Copying for private or commercial purposes, in part or in whole, is not permitted unless authorised by Volkswagen AG. Volkswagen AG does not guarantee or accept any liability with respect to the correctness of information in this document. Copyright by Volkswagen AG

⇒ “3.2.2 Battery Charger VAS5900 Device Description”, page 38 .

– Set the battery type with the INFO button.

The symbol -1- for “service charge of wet batteries” or the symbol -2- for “service charge of Gel/Absorbent Glass Mat (AGM) batteries” is indicated in the display.

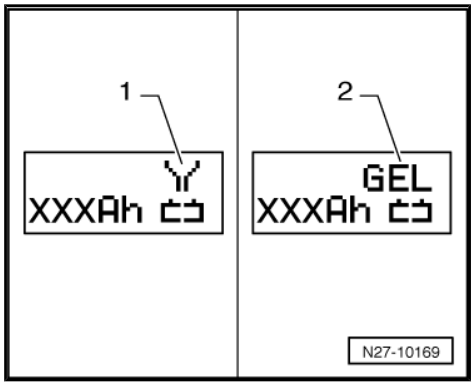

– Set the battery capacity (Ah) on the Battery - A- to be charged with the corresponding ↑ button or ↓ button.

– Connect the red charge terminal (+) to the positive terminal of the Battery - A- .

Note

On vehicles with a Start/Stop function and an installed Battery Monitoring Control Module - J367- , the black charge terminal (-) must be connected to the body ground. The Start/Stop system will malfunction when it is connected to the Battery - A- negative terminal.

– Connect the black charge terminal (-) to the negative terminal of the Battery - A- /negative connector.

– Press the START/STOP button for about 5 seconds. The menu selection “Charging severely discharged batteries/Support mode” is activated.

– Press the corresponding ↑-button or ↓ button to adjust the battery voltage(6 V/12 V/24 V).

Note

If no button is touched within five seconds, the Battery Charger - VAS5900- will return to the main menu (operating mode selection).

– Select the battery voltage by pressing the START/STOP button.

Then the inquiry about the correct polarity of the charging clamps is made.

– Check correct polarity connection of charger clamps.

– Confirm charging clamps are connected to correct poles via START/STOP button.

The Battery Charger - VAS5900- starts to charge the severely discharged Battery - A- .

Battery - A- Charging, Ending

– Press the START/STOP-button.

– Remove the charging clamps from the battery terminals.

– Disconnect the Battery Charger - VAS5900- from the power.

3.2.6 Battery Charger - VAS5900- Support Mode

Special tools and workshop equipment required

♦ Battery Charger - VAS5900-

Protected by copyright. Copying for private or commercial purposes, in part or in whole, is not permitted unless authorised by Volkswagen AG. Volkswagen AG does not guarantee or accept any liability with respect to the correctness of information in this document. Copyright by Volkswagen AG.

General Information

The support mode provides the vehicle electrical system with voltage when the Battery - A- is removed or disconnected.

For more information. Refer to the Battery Charger - VAS5900- Operating Instructions.

The support mode is used for the following situations:

- Vehicle electrical system support mode with the Battery - A- not installed
- Maintaining the voltage when the battery is being replaced
- Systems test without the Battery - A-

> **WARNING**
>
> *Risk of injury. Follow all warning messages and safety precautions. Refer to ⇒ "1.3 Warnings and Safety Precautions", page 3 .*

> **WARNING**
>
> *Do not check or charge a Battery - A- when the visual indicator has »no color or is bright yellow«. Jump starting must not be used!*
>
> *There is a risk of explosion during testing, charging or jump starting.*
>
> *These Batteries - A- must be replaced.*

Procedure

> **Caution**
>
> - *The polarity protection of the charger clamps is not active in the operation mode "charging severely discharged batteries/Support mode". Connect the charger clamps to the battery terminals correctly according to polarity!*
> - *It can result in sparks due to short circuit.*
> - *This constitutes an explosion risk.*
> - *Do not touch START/STOP button when battery cables are incorrectly connected! The Battery Charger - VAS5900- can become damaged.*

– Remove the Battery - A- . Refer to ⇒ Electrical Equipment; Rep. Gr. 27 ; Battery; Battery, Removing and Installing .

– Connect the Battery Charger - VAS5900- to the power supply. The last selected mode is shown on the display. Refer to ⇒ "3.2.2 Battery Charger VAS5900 Device Description", page 38 .

Protected by copyright. Copying for private or commercial purposes, in part or in whole, is not permitted unless authorised by Volkswagen AG. Volkswagen AG does not guarantee or accept any liability with respect to the correctness of information in this document. Copyright by Volkswagen AG.

Caution

Whenever the Battery - A- is removed, be careful to prevent contact between the connected charge clamp on the positive terminal and the body ground. Likewise prevent contact between the battery terminals.

– Connect the red charge terminal (+) to the positive terminal of the Battery - A- .

Note

On vehicles with a Start/Stop function and an installed Battery Monitoring Control Module - J367- , the black charge terminal (-) must be connected to the body ground. The Start/Stop system will malfunction when it is connected to the Battery - A- negative terminal.

– Connect the black charge terminal (-) to the negative terminal of the Battery - A- /negative connector.

– Press the START/STOP button for about 5 seconds. The menu selection “Charging severely discharged batteries/Support mode” is activated.

– Press the corresponding ↑-button or ↓ button to adjust the battery voltage(6 V/12 V/24 V).

Note

If no button is touched within five seconds, the Battery Charger - VAS5900- will return to the main menu (operating mode selection).

– Select the battery voltage by pressing the START/STOP button.

Then the inquiry about the correct polarity of the charging clamps is made.

– Check correct polarity connection of charger clamps.

– Confirm charging clamps are connected to correct poles via START/STOP button.

The Battery Charger - VAS5900- starts the Battery - A- support mode.

End the Battery Support Mode

– Press the START/STOP-button.

– Remove the charging clamps from the battery terminals.

– Disconnect the Battery Charger - VAS5900- from the power.

3.2.7 Battery Charger - VAS5900- Maintenance Charging

Special tools and workshop equipment required

♦ Battery Charger - VAS5900-

If the Battery - A- is discharged by an electrical consumer during maintenance charging, the Battery Charger - VAS5900- automatically supplies the appropriate charge.

Copyright by Volkswagen AG. Volkswagen AG does not guarantee or accept any liability with respect to the correctness of information in this document. Copyright by Volkswagen AG. Reproduction, in part or in whole, is not permitted without express authorisation by Volkswagen AG. Volkswagen AG does not guarantee or accept any liability with respect to the correctness of information in this document. Copyright by Volkswagen AG.

Maintenance charging can be performed without time restrictions.
The Battery - A- can be used constantly.

Note

Observe the maintenance notes of the battery manufacturer.

WARNING

Risk of injury. Follow all warning messages and safety precautions. Refer to ⇒ "1.3 Warnings and Safety Precautions", page 3 .

WARNING

Do not check or charge a Battery - A- when the visual indicator has »no color or is bright yellow«. Jump starting must not be used!

There is a risk of explosion during testing, charging or jump starting.

These Batteries - A- must be replaced.

If the Battery - A- is fully charged, the Battery Charger - VAS5900- starts maintenance charging.

Procedure

– Proceed as if charging the Battery - A- . Refer to ⇒ "3.2.3 Battery, Charging with Battery Charger VAS5900 ", page 38 .

With a charge status of 100 %, all bars are indicated on the display -1-.

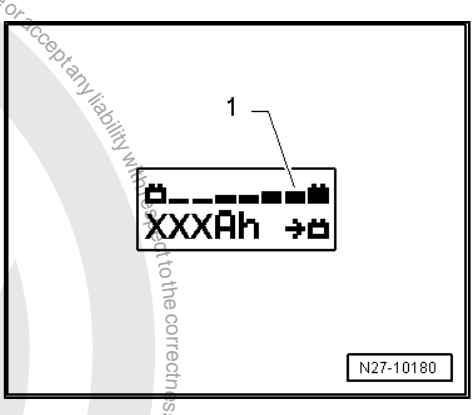

Protected by copyright. Copying for private or commercial purposes, in part or in whole, is not permitted unless authorised by Volkswagen AG. Volkswagen AG does not guarantee or accept any liability with respect to the correctness of information in this document. Copyright by Volkswagen AG.

3.3 Battery Charger - VAS5903-

⇒ “3.3.1 General Information”, page 48

⇒ “3.3.2 Battery Charger VAS5903 Device Description”, page 49

⇒ “3.3.3 Battery, Charging with Battery Charger VAS5903 ”, page 49

⇒ “3.3.4 Battery Charger VAS5903 Refresh Charge”, page 51

⇒ “3.3.5 Severely Discharged Battery, Charging with Battery Charger VAS5903 ”, page 54

⇒ “3.3.6 Battery Charger VAS5903 Support Mode”, page 55

⇒ “3.3.7 Battery Charger VAS5903 Maintenance Charging”, page 57

3.3.1 General Information

WARNING

Risk of injury. Follow all warning messages and safety precautions. Refer to ⇒ “1.3 Warnings and Safety Precautions”, page 3 .

WARNING

Do not check or charge a Battery - A- when the visual indicator has »no color or is bright yellow«. Jump starting must not be used!

There is a risk of explosion during testing, charging or jump starting.

These Batteries - A- must be replaced.

Observe the Battery Charger - VAS5903- Operating Instructions.

- Battery Charger - VAS5903- device description. Refer to ⇒ “3.3.2 Battery Charger VAS5903 Device Description”, page 49 .
- Charge the Battery - A- . Refer to ⇒ “3.3.3 Battery, Charging with Battery Charger VAS5903 ”, page 49 .
- Refresh charge. Refer to ⇒ “3.3.4 Battery Charger VAS5903 Refresh Charge”, page 51 .
- Severely discharged Battery - A- , charging. Refer to ⇒ “3.3.5 Severely Discharged Battery, Charging with Battery Charger VAS5903 ”, page 54 .
- Support mode. Refer to ⇒ “3.3.6 Battery Charger VAS5903 Support Mode”, page 55 .
- Maintenance charging. Refer to ⇒ “3.3.7 Battery Charger VAS5903 Maintenance Charging”, page 57 .

Protected by Volkswagen AG. Volkswagen AG does not guarantee or accept any liability with respect to the correctness of information in this document. Copyright by Volkswagen AG.
Protected by copyright. Copying for private or commercial purposes, in part or in whole, is not permitted unless authorized by Volkswagen AG.

3.3.2 Battery Charger - VAS5903- Device Description

The Battery Charger - VAS5903- is designed to charge all 12 V Batteries - A- in the VW group.

Battery Charger - VAS5903-

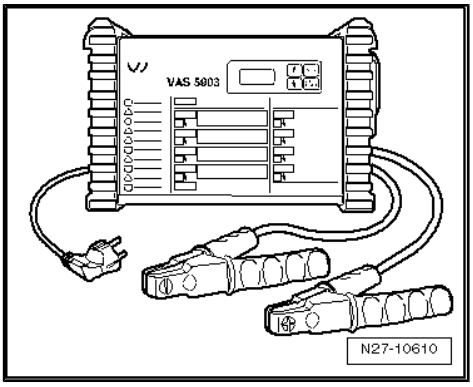

Control field overview

1 - Display

2 - ↑-button “Up”

3 - ↓-button “Down”

4 - START/STOP-button

5 - INFO-button

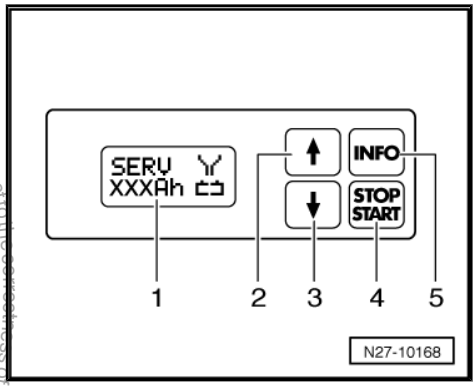

3.3.3 Battery, Charging with Battery Charger - VAS5903-

Special tools and workshop equipment required

♦ Battery Charger - VAS5903-

> ⚠ **WARNING**
>
> *Risk of injury. Follow all warning messages and safety precautions. Refer to* *⇒ “1.3 Warnings and Safety Precautions”, page 3* *.*

> ⚠ **WARNING**
>
> *Do not check or charge a Battery - A- when the visual indicator has »no color or is bright yellow«. Jump starting must not be used!*
>
> *There is a risk of explosion during testing, charging or jump starting.*
>
> *These Batteries - A- must be replaced.*

Note

The Battery - A- temperature must be at least 10 °C.

Protected by copyright. Copying for private or commercial purposes, in part or in whole, is not permitted unless authorised by Volkswagen AG. Volkswagen AG does not guarantee or accept any liability with respect to the correctness of information in this document. Copyright by Volkswagen AG.

Procedure

– Turn off the ignition and all electrical consumers and remove the ignition key.

– Connect the Battery Charger - VAS5903- to the power supply. The last selected operation mode is shown on the display. Refer to ⇒ “3.3.2 Battery Charger VAS5903 Device Description”, page 49 .

– Set the battery type with the INFO button.

The symbol -1- for “standard charge of wet batteries” or the symbol -2- for “standard charge of Gel/Absorbent Glass Mat (AGM) batteries” is indicated in the display.

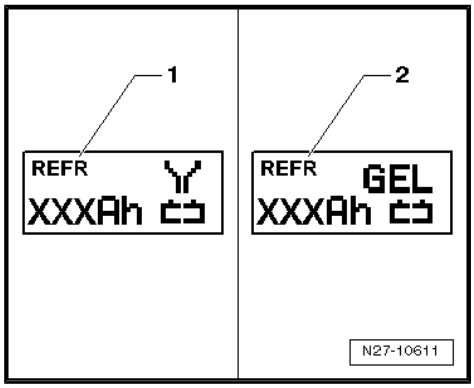

– Set the battery capacity (Ah) on the Battery - A- to be charged with the corresponding ↑ button or ↓ button.

– Connect the red charge terminal (+) to the positive terminal of the Battery - A- .

Note

On vehicles with a Start/Stop function and an installed Battery Monitoring Control Module - J367- , the black charge terminal (-) must be connected to the body ground. The Start/Stop system will malfunction when it is connected to the Battery - A- negative terminal.

– Connect the black charge terminal (-) to the negative terminal of the Battery - A- /negative connector.

The Battery Charger - VAS5903- recognizes the nominal voltage of the connected Battery - A- (6 V/12 V/24 V) and begins the charging process automatically.

The Battery Charger - VAS5903- begins the “final charging” when the charge level is approximately 80 to 85%. The fourth bar is indicated on the display -1-. The Battery - A- is ready to be used.

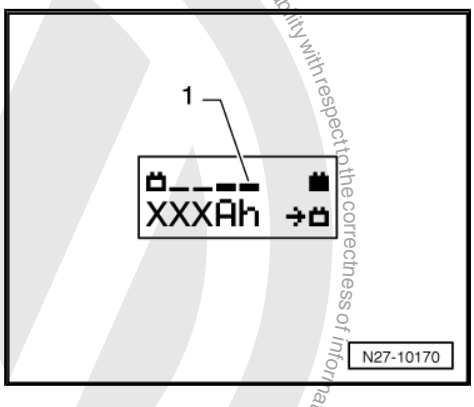

Protected by copyright. Copying for private or commercial purposes, in part or in whole, is not permitted unless authorised by Volkswagen AG. Volkswagen AG does not guarantee or accept any liability with respect to the correctness of information in this document. Copyright by Volkswagen AG.

With a charge status of 100%, all bars are indicated on the display -1-.

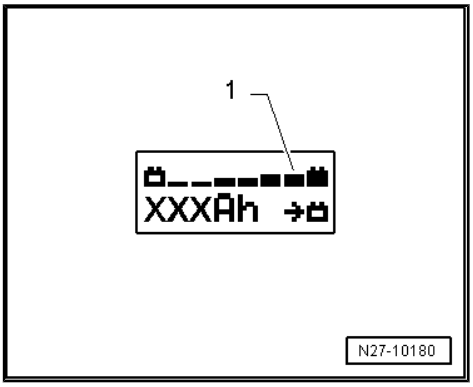

With the battery type “standard charge”, parallel operation of electrical consumers during the charging process is possible. The charging time is lengthened by this.

Depending on the battery type, the Battery Charger - VAS5903- switches to maintenance charging after 1 to 7 hours. To reach a 100% charge level, the Battery - A- should remain connected to the Battery Charger - VAS5903- .

Possible malfunctions and how they are handled

1 - Displayed voltage does not match the nominal voltage:

– Hold down the ↑ button or ↓ button until the charging process begins.

2 - Displayed battery voltage does not match rated voltage - charging process has already begun:

– Press the START/STOP button two times.

– Hold down the ↑ button or ↓ button until the charging process begins again.

3 - The charger does not recognize a Battery - A- , when the battery voltage is less than 2 V:

The display remains unchanged.

The selected battery type and Ampere hours (Ah) are displayed.

Battery - A- charging, ending

– Press the START/STOP-button.

– Remove the charging clamps from the battery terminals.

– Disconnect the Battery Charger - VAS5903- from the power.

3.3.4 Battery Charger - VAS5903- Refresh Charge

Special tools and workshop equipment required

♦ Battery Charger - VAS5900-

> **WARNING**
>
> ***Risk of injury. Follow all warning messages and safety precautions. Refer to*** ***⇒ “1.3 Warnings and Safety Precautions”, page 3*** ***.***

> **WARNING**
>
> ***Do not check or charge a Battery - A- when the visual indicator has »no color or is bright yellow«. Jump starting must not be used!***
>
> ***There is a risk of explosion during testing, charging or jump starting.***
>
> ***These Batteries - A- must be replaced.***

Protected by copyright. Copyright by Volkswagen AG does not guarantee or accept any liability with respect to the correctness of information in this document. Copyright by Volkswagen AG

Caution

Refresh charging is not permitted for VW vehicles, because voltage surges can damage the on-board electronics.

The Battery - A- must always be disconnected from the vehicle electrical system when using the refresh charge mode.

Caution

Always set the mode that corresponds to the Battery - A- during the charging process. Refer to the Battery Charger - VAS5903- Operating Instructions.

Refresh charging is suitable for wet batteries, which must be filled with distilled water.

Do not use the refresh charge mode on maintenance-free wet batteries.

The “Refresh charging REFR” operating mode is only used for Batteries - A- that are possibly faulty (sulfation). The Battery - A- is then charged to the maximum specific gravity of the electrolyte and the plates are reactivated (removal of sulfation layer).

Note

The Battery - A- temperature must be at least 10 °C.

Procedure

– Turn off the ignition and all electrical consumers and remove the ignition key.

– Connect the Battery Charger - VAS5903- to the power supply. The last selected operation mode is shown on the display. Refer to ⇒ “3.3.2 Battery Charger VAS5903 Device Description”, page 49 .

Protected by copyright. Copyright by Volkswagen AG.

– Set the battery type with the INFO button.

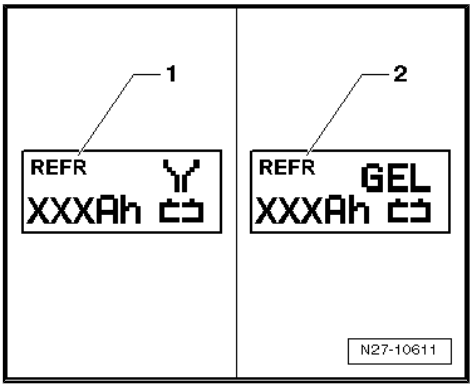

The symbol -1- for “refresh charge of wet batteries” or the symbol -2- for “refresh charge of Gel/Absorbent Glass Mat (AGM) batteries” is indicated in the display.

– Set the battery capacity (Ah) on the Battery - A- to be charged with the corresponding ↑ button or ↓ button.

– Connect the red charge terminal (+) to the positive terminal of the Battery - A- .

Note

On vehicles with a Start/Stop function and an installed Battery Monitoring Control Module - J367- , the black charge terminal (-) must be connected to the body ground. The Start/Stop system will malfunction when it is connected to the Battery - A- negative terminal.

– Connect the black charge terminal (-) to the negative terminal of the Battery - A- /negative connector.

The Battery Charger - VAS5900- recognizes the nominal voltage of the connected Battery - A- (6 V/12 V/24 V) and begins the charging process automatically.

The Battery Charger - VAS5900- begins the “final charging” when the charge level is approximately 80 to 85 % of the battery voltage. The fourth bar is indicated on the display -1-. The Battery - A- is now ready to be used.

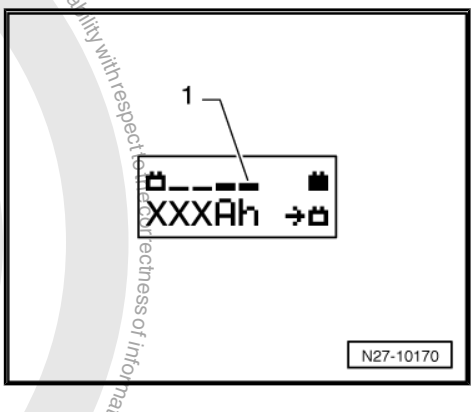

Note

A successful refresh charging depends on the degree of sulfation on the Battery - A- .

Possible malfunctions and how they are handled

1 - Displayed voltage does not match the nominal voltage:

– Hold down the ↑ button or ↓ button until the charging process begins.

2 - Displayed battery voltage does not match rated voltage - charging process has already begun:

– Press the START/STOP button two times.

– Hold down the ↑ button or ↓ button until the charging process begins.

3 - The charger does not recognize a Battery - A- , when the battery voltage is less than 2 V:

The display remains unchanged.

The set operating mode and Ampere-hours (Ah) are displayed.

Battery - A- charging, ending

– Press the START/STOP-button.

– Remove the charging clamps from the battery terminals.

– Disconnect the Battery Charger - VAS5903- from the power.

Protected by copyright. Copying or private or commercial purposes in part or in whole is not permitted without the authorised by Volkswagen AG. Volkswagen AG does not guarantee or accept any liability with respect to the correctness of information in this document. Copyright by Volkswagen AG.

3.3.5 Severely Discharged Battery, Charging with Battery Charger - VAS5903-

Special tools and workshop equipment required

- Battery Charger - VAS5903-

WARNING

Risk of injury. Follow all warning messages and safety precautions. Refer to *⇒ "1.3 Warnings and Safety Precautions", page 3* *.*

WARNING

Do not check or charge a Battery - A- when the visual indicator has »no color or is bright yellow«. Jump starting must not be used!

There is a risk of explosion during testing, charging or jump starting.

These Batteries - A- must be replaced.

Caution

- *The polarity protection of the charger clamps is not active in the operation mode "charging severely discharged batteries/Support mode". Connect the charger clamps to the battery terminals correctly according to polarity!*
- *Always set the mode that corresponds to the Battery - A- during the charging process. Refer to the Battery Charger - VAS5903- Operating Instructions.*
- *The Battery Charger - VAS5903- does not recognize the severely discharged Battery - A- . Refer to* *⇒ "3.7 Severely Discharged Batteries", page 68* *.*
- *Do not touch* START/STOP *button when battery cables are incorrectly connected! The Battery Charger - VAS5903- can become damaged.*

The Battery Charger - VAS5903- will not automatically recognize the Battery - A- for Batteries - A- with a voltage less than 2 V.

Note

- *For information. Refer to the chapter* *⇒ "3.7 Severely Discharged Batteries", page 68* *.*
- *The Battery - A- temperature must be at least 10 °C (50 °F).*
- *Severely discharged batteries in vehicles must be replaced prior to delivery. Pre-existing damage cannot be ruled out.*

Procedure

– Turn off the ignition and all electrical consumers and remove the ignition key.

– Connect the Battery Charger - VAS5903- to the power supply. The last selected operation mode is shown on the display.

Volkswagen AG. Volkswagen AG does not guarantee or accept any liability with respect to the correctness of information in this document. Copyright by Volkswagen AG. Copying for private or commercial purposes, in part or in whole, is not permitted unless authorized by Volkswagen AG.

Refer to
⇒ "3.3.2 Battery Charger VAS5903 Device Description", page 49 .

– Set the battery type with the INFO button.

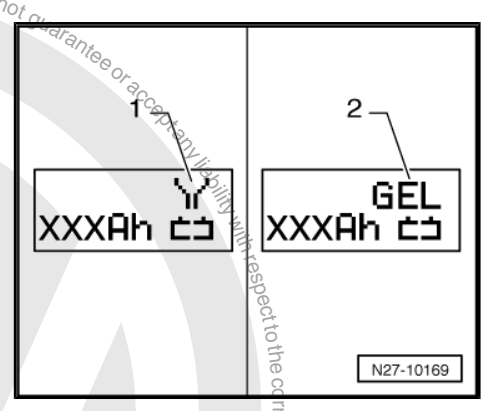

The symbol -1- for "service charge of wet batteries" or the symbol -2- for "service charge of Gel/Absorbent Glass Mat (AGM) batteries" is indicated in the display.

– Set the battery capacity (Ah) on the Battery - A- to be charged with the corresponding ↑ button or ↓ button.

– Connect the red charge terminal (+) to the positive terminal of the Battery - A- .

Note

On vehicles with a Start/Stop function and an installed Battery Monitoring Control Module - J367- , the black charge terminal (-) must be connected to the body ground. The Start/Stop system will malfunction when it is connected to the Battery - A- negative terminal.

– Connect the black charge terminal (-) to the negative terminal of the Battery - A- /negative connector.

– Press the START/STOP button for about 5 seconds. The menu selection "Charging severely discharged batteries/Support mode" is activated.

– Press the corresponding ↑-button or ↓ button to adjust the battery voltage(6 V/12 V/24 V).

Note

If no button is touched within five seconds, the Battery Charger - VAS5903- will return to the main menu (operating mode selection).

– Select the battery voltage by pressing the START/STOP button.

Then the inquiry about the correct polarity of the charging clamps is made.

– Check correct polarity connection of charger clamps.

– Confirm charging clamps are connected to correct poles via START/STOP button.

The Battery Charger - VAS5903- starts to charge the severely discharged Battery - A- .

Battery - A- Charging, Ending

– Press the START/STOP-button.

– Remove the charging clamps from the battery terminals.

– Disconnect the Battery Charger - VAS5903- from the power.

3.3.6 Battery Charger - VAS5903- Support Mode

Special tools and workshop equipment required

♦ Battery Charger - VAS5903-

Protected by copyright. Copying for private or commercial purposes, in part or in whole, is not permitted unless authorized by Volkswagen AG. Volkswagen AG does not guarantee or accept any liability with respect to the correctness of information in this document. Copyright by Volkswagen AG.

General Information

The support mode provides the vehicle electrical system with voltage when the Battery - A- is removed or disconnected.

For more information. Refer to the Battery Charger - VAS5903- Operating Instructions.

The support mode is used for the following situations:

- Vehicle electrical system support mode with the Battery - A- not installed
- Maintaining the voltage when the battery is being replaced
- Systems test without the Battery - A-

> ⚠ **WARNING**
>
> *Risk of injury. Follow all warning messages and safety precautions. Refer to ⇒ "1.3 Warnings and Safety Precautions", page 3 .*

> ⚠ **WARNING**
>
> *Do not check or charge a Battery - A- when the visual indicator has »no color or is bright yellow«. Jump starting must not be used!*
>
> *There is a risk of explosion during testing, charging or jump starting.*
>
> *These Batteries - A- must be replaced.*

Procedure

> ⚠ **Caution**
>
> - *The polarity protection of the charger clamps is not active in the operation mode "charging severely discharged batteries/Support mode". Connect the charger clamps to the battery terminals correctly according to polarity!*
> - *It can result in sparks due to short circuit.*
> - *This constitutes an explosion risk.*
> - *Make sure the charging clamp connections are secure.*
> - *Do not touch START/STOP button when battery cables are incorrectly connected! The Battery Charger - VAS5903- can become damaged.*

– Remove the Battery - A- . Refer to ⇒ Electrical Equipment; Rep. Gr. 27 ; Battery; Battery, Removing and Installing .

– Connect the Battery Charger - VAS5903- to the power supply. The last selected operation mode is shown on the display. Refer to ⇒ "3.3.2 Battery Charger VAS5903 Device Description", page 49 .

Protected by copyright. Copying for private or commercial purposes, in part or in whole, is not permitted unless authorised by Volkswagen AG. Volkswagen AG does not guarantee or accept any liability with respect to the correctness of information in this document. Copyright by Volkswagen AG.

Caution

Whenever the Battery - A- is removed, be careful to prevent contact between the connected charge clamp on the positive terminal and the body ground. Likewise prevent contact between the battery terminals.

– Connect the red charge terminal (+) to the positive terminal of the Battery - A- .

Note

On vehicles with a Start/Stop function and an installed Battery Monitoring Control Module - J367- , the black charge terminal (-) must be connected to the body ground. The Start/Stop system will malfunction when it is connected to the Battery - A- negative terminal.

– Connect the black charge terminal (-) to the negative terminal of the Battery - A- /negative connector.

– Press the START/STOP button for about 5 seconds. The menu selection “Charging severely discharged batteries/Support mode” is activated.

– Press the corresponding ↑-button or ↓ button to adjust the battery voltage(6 V/12 V/24 V).

Note

If no button is touched within five seconds, the Battery Charger - VAS5903- will return to the main menu (operating mode selection).

– Select the battery voltage by pressing the START/STOP button.

Then the inquiry about the correct polarity of the charging clamps is made.

– Check correct polarity connection of charger clamps.

– Confirm charging clamps are connected to correct poles via START/STOP button.

The Battery Charger - VAS5903- starts the Battery - A- support mode.

End the battery support mode

– Press the START/STOP-button.

– Remove the charging clamps from the battery terminals.

– Disconnect the Battery Charger - VAS5903- from the power.

3.3.7 Battery Charger - VAS5903- Maintenance Charging

Special tools and workshop equipment required

♦ Battery Charger - VAS5903-

If the Battery - A- is discharged by an electrical consumer during maintenance charging, the Battery Charger - VAS5903- automatically supplies an appropriate charge.

Protected by copyright. Copying for private or commercial purposes, in part or in whole, is not permitted unless authorised by Volkswagen AG. Volkswagen AG does not guarantee or accept any liability with respect to the correctness of information in this document. Copyright by Volkswagen AG.

Maintenance charging can be performed without time restrictions.
The Battery - A- can be used constantly.

Note

Observe the maintenance notes of the battery manufacturer.

WARNING

Risk of injury. Follow all warning messages and safety precautions. Refer to ⇒ "1.3 Warnings and Safety Precautions", page 3 .

WARNING

Do not check or charge a Battery - A- when the visual indicator has »no color or is bright yellow«. Jump starting must not be used!

There is a risk of explosion during testing, charging or jump starting.

These Batteries - A- must be replaced.

If the Battery - A- is fully charged, the Battery Charger - VAS5903- starts maintenance charging.

Procedure

– Proceed as if charging the Battery - A- . Refer to ⇒ "3.3.3 Battery, Charging with Battery Charger VAS5903 ", page 49 .

With a charge status of 100%, all bars are indicated on the display -1-.

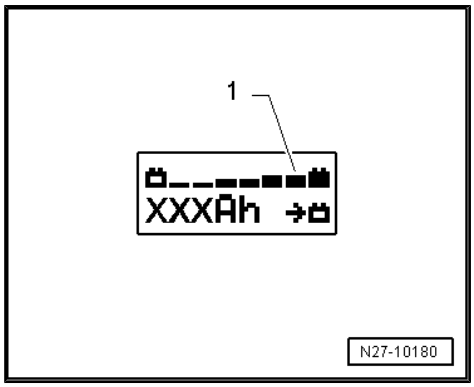

Protected by copyright. Copying for private or commercial purposes, in part or in whole, is not permitted unless authorised by Volkswagen AG. Volkswagen AG does not guarantee or accept any liability with respect to the correctness of information in this document. Copyright by Volkswagen AG.

3.4 Battery Charger - VAS5906-

⇒ “3.4.1 General Information”, page 59

⇒ “3.4.2 Battery Charger VAS5906 Device Description”, page 59

⇒ “3.4.3 Battery, Charging with Battery Charger VAS5906 ”, page 60

3.4.1 General Information

WARNING

Risk of injury. Follow all warning messages and safety precautions. Refer to ⇒ “1.3 Warnings and Safety Precautions”, page 3 .

WARNING

Do not check or charge a Battery - A- when the visual indicator has »no color or is bright yellow«. Jump starting must not be used!

There is a risk of explosion during testing, charging or jump starting.

These Batteries - A- must be replaced.

Observe the Battery Charger - VAS5906- Operating Instructions.

- Battery Charger - VAS5906- device description. Refer to ⇒ “3.4.2 Battery Charger VAS5906 Device Description”, page 59 .
- Charge the Battery - A- . Refer to ⇒ “3.4.3 Battery, Charging with Battery Charger VAS5906 ”, page 60 .

3.4.2 Battery Charger - VAS5906- Device Description

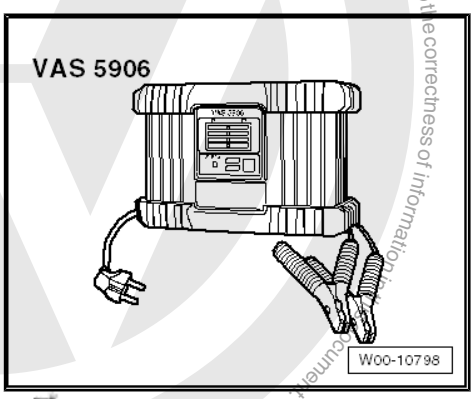

Battery Charger - VAS5906-

The Battery Charger - VAS5906- was developed especially for charging the vehicle electrical system while the vehicle is on display.

It supplies for automatic charging of 3 - 300 Ah for starter batteries.

The 14.4 V maximum charging voltage is not exceeded. All electrical consumers will be supported up to 30 A by the support charging.

After the battery - A- is completely charged, the Battery Charger - VAS5906- switches into the maintenance charging for long-term operation.

The Battery Charger - VAS5906- starts automatically and does not need any adjustments. Only the charging terminals and the network cable need to be connected.

For more information. Refer to the Battery Charger - VAS5906- Operating Instructions.

Protected by copyright. Copying for private or commercial purposes, in part or in whole, is not permitted unless authorised by Volkswagen AG. Volkswagen AG does not guarantee or accept any liability with respect to the correctness of information in this document. Copyright by Volkswagen AG.

Control Field Overview

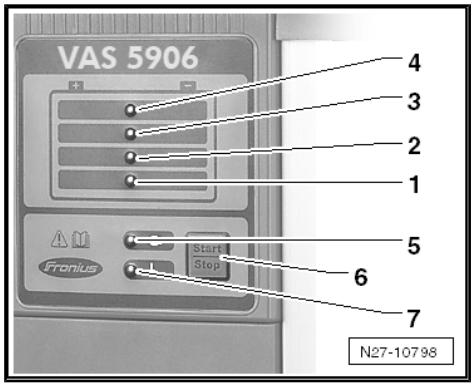

1 - 25% charge display

2 - 50% charge display

3 - 75% charge display

4 - 100% charge display

5 - Ready-to-use display

6 - Pushing the START/STOP and Setup buttons will stop and start the charging process. Enter into the setup menu and select characteristic line type (hold for 10 seconds)

7 - Display malfunction

3.4.3 Battery, Charging with Battery Charger - VAS5906-

Special tools and workshop equipment required

- Battery Charger - VAS5906-

> ⚠ **WARNING**
>
> *Risk of injury. Follow all warning messages and safety precautions. Refer to ⇒ "1.3 Warnings and Safety Precautions", page 3 .*

> ⚠ **WARNING**
>
> *Do not check or charge a Battery - A- when the visual indicator has »no color or is bright yellow«. Jump starting must not be used!*
>
> *There is a risk of explosion during testing, charging or jump starting.*
>
> *These Batteries - A- must be replaced.*

Procedure

– Turn off the ignition and all electrical consumers and remove the ignition key.

– Place the Battery Charger - VAS5906- in the engine compartment or under the vehicle.

– Connect the Battery Charger - VAS5906- to the power supply.

The Battery Charger - VAS5906- is in idle, the display comes on when it is "ready to be used".

> ⚠ **WARNING**
>
> *Risk of injury. Follow all warning messages and safety precautions. Refer to ⇒ "1.3 Warnings and Safety Precautions", page 3 .*

– Connect the red charge terminal (+) to the positive terminal of the Battery - A- .

Protected by copyright. Copyright by Volkswagen AG.

Note

On vehicles with a Start/Stop function and an installed Battery Monitoring Control Module - J367- , the black charge terminal (-) must be connected to the body ground. The Start/Stop system will malfunction when it is connected to the Battery - A- negative terminal.

– Connect the black charge terminal (-) to the negative terminal of the Battery - A- /negative connector.

The charging process starts after approximately two seconds.

LEDs show the battery charge level of the Battery - A- . When all the lights are on, the Battery - A- is charged.

When the Battery - A- is completely charged, the Battery Charger - VAS5906- automatically switches to maintenance charging.

Caution

Sparks can result if the charging terminals are removed too early. End the charging process by pressing the START/STOP button.

Battery - A- charging, ending

– Press the START/STOP-button.

– Remove the charging clamps from the battery terminals.

– Disconnect the Battery Charger - VAS5906- from the power.

3.5 Battery Tester Charger Kit - GRX3000VAS-

⇒ "3.5.1 General Information", page 61

⇒ "3.5.2 Battery Tester Charger Kit GRX3000VAS Device Description", page 62

⇒ "3.5.3 Battery, Charging with Battery Tester Charger Kit GRX3000VAS ", page 63

⇒ "3.5.4 Battery Tester Charger Kit GRX3000VAS Troubleshooting", page 65

3.5.1 General Information

WARNING

Risk of injury. Follow all warning messages and safety precautions. Refer to ⇒ "1.3 Warnings and Safety Precautions", page 3 .

Protected by copyright. Copying for private or commercial purposes, in part or on whole is not permitted unless authorised by Volkswagen AG. Volkswagen AG does not guarantee or accept any liability with respect to the correctness of information in this document. Copyright by Volkswagen AG.

Protected by copyright. Copying for private or commercial purposes, in part or in whole, is not permitted unless authorised by Volkswagen AG. Volkswagen AG does not guarantee or accept any liability with respect to the correctness of information in this document. Copyright by Volkswagen AG.

WARNING

Do not check or charge a Battery - A- when the visual indicator has »no color or is bright yellow«. Jump starting must not be used!

There is a risk of explosion during testing, charging or jump starting.

These Batteries - A- must be replaced.

Observe the Battery Tester Charger Kit - GRX3000VAS- Operating Instructions.

- Battery Tester Charger Kit - GRX3000VAS- device description. Refer to
  ⇒ “3.5.2 Battery Tester Charger Kit GRX3000VAS Device Description”, page 62 .
- Charge the Battery - A- . Refer to
  ⇒ “3.5.3 Battery, Charging with Battery Tester Charger Kit GRX3000VAS ”, page 63 .
- Battery Tester Charger Kit - GRX3000VAS- troubleshooting. Refer to
  ⇒ “3.5.4 Battery Tester Charger Kit GRX3000VAS Troubleshooting”, page 65 .

3.5.2 Battery Tester Charger Kit - GRX3000VAS- Device Description

Only Volkswagen approved battery chargers may be used to charge Batteries - A- in Volkswagen vehicles. Only the Battery Tester Charger Kit - GRX3000VAS- battery charger is used in the USA and Canada.

The Battery Tester Charger Kit - GRX3000VAS- battery charger combines battery charging with checking the charge level and testing the battery.

The charging and analysis procedures apply to all Batteries - A- , all battery installation locations (engine compartment or luggage compartment) and all battery designated usage (for the starter or for the second/convenience battery).

Always observe the following points:

- Safety precautions
- Midtronics Battery Tester - MCR340VKT- set-up guidelines
- Display menu
- Display button and LED
- Procedure in the Midtronics Battery Tester - MCR340VKT- Operating Instructions

For additional information. Refer to ⇒ Self Study Program No. 234 ; Vehicle Batteries .

WARNING

Risk of injury. Follow all warning messages and safety precautions. Refer to ⇒ “1.3 Warnings and Safety Precautions”, page 3 .

WARNING

Keep open flame and sparks away from the Batteries - A- and do not smoke.

The Battery Tester Charger Kit - GRX3000VAS- must be switched off when connecting or disconnect the cables.

Do not remove the plugs while charging.

Overcharging sulfated Batteries - A- can cause an explosion.

Precision tools may not be kept in areas where batteries are charged. Chemical reactions can lead to corrosion.

WARNING

Do not check or charge a Battery - A- when the visual indicator has »no color or is bright yellow«. Jump starting must not be used!

There is a risk of explosion during testing, charging or jump starting.

These Batteries - A- must be replaced.

3.5.3 Battery, Charging with Battery Tester Charger Kit - GRX3000VAS-

Requirements

WARNING

Do not check or charge a Battery - A- when the visual indicator has »no color or is bright yellow«. Jump starting must not be used!

There is a risk of explosion during testing, charging or jump starting.

These Batteries - A- must be replaced.

- Output - setup (unit number/date/ time), performing. Refer to the Battery Tester Charger Kit - GRX3000VAS- Operating Instructions.
- General information, checking. Refer to ⇒ “3.5.2 Battery Tester Charger Kit GRX3000VAS Device Description”, page 62 .
- Battery - A- , visually inspecting. Refer to ⇒ “2.2 Visual Inspection”, page 9 .
- Select the battery type (standard or AGM).
- Close all the vehicle doors.

Note

- *The Battery - A- temperature must be at least 10 °C.*
- *For more information. Refer to the Battery Tester Charger Kit - GRX3000VAS- Operating Instructions.*

Copyright by Volkswagen AG. Volkswagen AG does not guarantee or accept any liability with respect to the correctness of information in this document. Copyright by Volkswagen AG. Volkswagen AG does not permitted unless authorised. All rights are reserved in the event of the granting of a patent or the registration of a utility model or design. Any use of the technical data, standards and tools referred to in this document shall be subject to the conditions of the relevant licence agreement only. Any other use, in whole or in part, is not permitted without prior written consent of Volkswagen AG. For purposes, in part, in whole or in part, is not permitted unless authorised.

Procedure

– Turn off the ignition and all electrical consumers and remove the ignition key.

– Connect the red charge terminal (+) to the positive terminal of the Battery - A- .

Note

On vehicles with a Start/Stop function and an installed Battery Monitoring Control Module - J367- , the black charge terminal (-) must be connected to the body ground. The Start/Stop system will malfunction when it is connected to the Battery - A- negative terminal.

– Connect the black charge terminal (-) to the negative terminal of the Battery - A- /negative connector.

– Connect the Battery Tester Charger Kit - GRX3000VAS- to the power supply.

– Switch the ON/OFF switch on the Battery Tester Charger Kit - GRX3000VAS- to “ON”.

– Select charging mode (automatic or manual).

– Select inside the vehicle or outside of the vehicle.

– Select the battery type (standard or AGM).

– Select the type of test (Warranty or other). Note any other additional details (depending on the type of test).

Note

♦ *For more information. Refer to the Battery Tester Charger Kit - GRX3000VAS- Operating Instructions.*

♦ *Select the necessary menu points for the test type “warranty”.*

The Battery Tester Charger Kit - GRX3000VAS- checks the Battery - A- and starts the charging process. The display then show one of 3 results with the exact charging time.

Result	Measure
Battery - A- good	The Battery - A- can be used again.
Charging is required	♦ The test shows a low state of charge. ♦ The charging process begins and the exact duration for the charging will be displayed ♦ The cold start performance and the remaining charging time are displayed and updated regularly.
Battery - A- , replacing	Battery - A- defective. The charging process is interrupted. – Replace the Battery - A- . Refer to ⇒ Electrical Equipment; Rep. Gr. 27 ; Battery; Battery, Removing and Installing .

Protected by copyright. Copying for private or commercial purposes, in part or in whole, is not permitted unless authorised by Volkswagen AG. Volkswagen AG does not guarantee or accept any liability with respect to the correctness of information in this document. Copyright by Volkswagen AG.

Note

If other malfunction messages or text displays, other than the ones already mentioned, appear in the display on the Battery Tester Charger Kit - GRX3000VAS- battery charger, then refer to chapter
⇒ "3.5.4 Battery Tester Charger Kit GRX3000VAS Troubleshooting", page 65 .

WARNING

If the Battery - A- starts to vent gas heavily, stop the charging process. Press the Stop button on the front side.

After the charging and testing process is completed, the Battery Tester Charger Kit - GRX3000VAS- will display "battery good" or "replace the battery" and the total charging time.

Depending on the individual circumstance (Warranty Claim, Repair Order, Evaluation and File), there are 3 possible messages:

- Produce a test code (possible only after automatic charging and testing).
- Print last test result (for Warranty)
- Display the last test result.

Note

For more information. Refer to the Battery Tester Charger Kit - GRX3000VAS- Operating Instructions.

Battery - A- charging, ending

– Remove the charging clamps from the battery terminals.

– Disconnect the Battery Tester Charger Kit - GRX3000VAS- .

3.5.4 Battery Tester Charger Kit - GRX3000VAS- Troubleshooting

Sometimes the display shows the malfunction or the messages based on the condition.

The following is a list of the most frequent displayed messages together with suggested solutions.

Note

For any messages not listed. Refer to the Battery Tester Charger Kit - GRX3000VAS- Operating Instructions.

Protected by copyright. Copying for private or commercial purposes, in part or in whole, is not permitted unless authorised by Volkswagen AG. Volkswagen AG does not guarantee or accept any liability with respect to the correctness of information in this document. Copyright by Volkswagen AG.

Display Message	Measure
Check the connection	– Make sure the Battery Tester Charger Kit - GRX3000VAS- charging clamps are attached securely to the battery terminals. – Make sure the battery pole is tightened to the tightening specification and is not corroded.
Terminals connected?	Battery Tester Charger Kit - GRX3000VAS- safety function. – Connect the charging clamps to the Battery - A- before starting the charging process.
System noises	– Switch off all electrical consumers. – Wait until all electrical equipment, which are monitored by the Vehicle Electrical System Control Module - J519- , are switched off. – Remove the key. – Disconnect any doubtful or standard production electrical equipment from the vehicle electrical system.

– Wait a few minutes and repeat the charging process. Refer to ⇒ “3.5.3 Battery, Charging with Battery Tester Charger Kit GRX3000VAS ”, page 63

Protected by copyright. Copyright or private or commercial purposes in part or whole is not permitted unless authorised by Volkswagen AG. Volkswagen AG does not guarantee or accept any liability with respect to the correctness of information in this document. Copyright by Volkswagen AG.

3.6 Solar Battery Maintainer - VAS6102A-

⇒ "3.6.1 Solar Battery Maintainer VAS6102A Device Description", page 67

⇒ "3.6.2 Solar Battery Maintainer VAS6102A Maintenance Charging", page 67

3.6.1 Solar Battery Maintainer - VAS6102A- Device Description

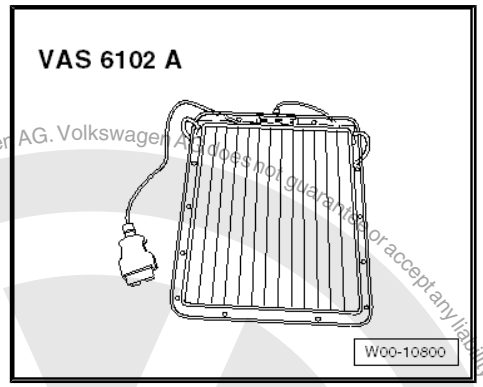

Solar Battery Maintainer - VAS6102A-

The Solar Battery Maintainer - VAS6102A- supports the vehicle electrical system and prevents the Battery - A- from self-discharging.

The Solar Battery Maintainer - VAS6102A- reaches a maximum voltage of 14.3 V and a maximum charge current of 255 mA.

All chargeable lead- and lead gel batteries can be charged with the Solar Battery Maintainer - VAS6102A-

The Solar Battery Maintainer - VAS6102A- is connected to the diagnostic connection in the vehicle.

The Solar Battery Maintainer - VAS6102A- has a green LED integrated inside the frame which displays the function being performed. The brighter the LED, the higher the charging current.

It is not possible to overcharge the Battery - A- due to the integrated electronics.

The Solar Battery Maintainer - VAS6102A- is secured on the interior rearview mirror -1-. The bottom rests on the instrument panel -2-.

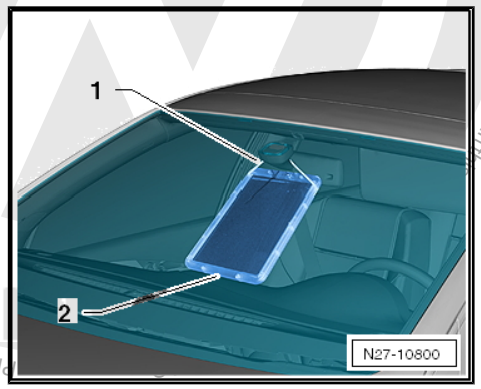

Note

The Solar Battery Maintainer - VAS6102A- must not touch the instrument panel completely. Only the bottom edge may be used for support. If it touches completely, the color of the instrument panel could change.

3.6.2 Solar Battery Maintainer - VAS6102A- Maintenance Charging

Special tools and workshop equipment required

- Solar Battery Maintainer - VAS6102A-

Protected by copyright. Copying for private or commercial purposes, in part or in whole, is not permitted unless authorised by Volkswagen AG. Volkswagen AG does not guarantee or accept any liability with respect to the correctness of information in this

Procedure

– Secure the Solar Battery Maintainer - VAS6102A- to the interior rearview mirror -1-.

– Lay the bottom on the instrument panel -2-.

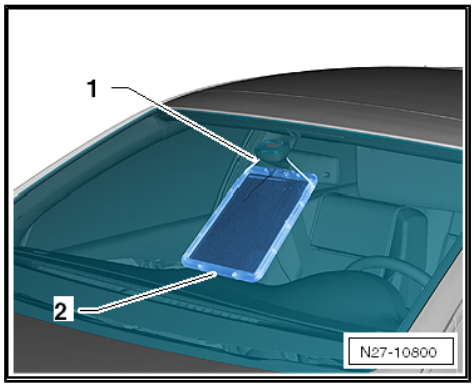

Note

The Solar Battery Maintainer - VAS6102A- must not touch the instrument panel completely. Only the bottom edge may be used for support. If it touches completely, the color of the instrument panel could change.

– Pull the securing string together so that the Solar Battery Maintainer - VAS6102A- is close to the glass.

– Connect the connector for the Solar Battery Maintainer - VAS6102A- to the vehicle diagnostic connection. Connecting is the same as with Vehicle Diagnostic Tester . Refer to ⇒ "1.2 Connect the Vehicle Diagnostic Tester ", page 89 .

– Check the Solar Battery Maintainer - VAS6102A- functionality. The green LED must come on.

3.7 Severely Discharged Batteries

WARNING

Risk of injury. Follow all warning messages and safety precautions. Refer to *⇒ "1.3 Warnings and Safety Precautions", page 3* .

A Battery - A- is designated as "severely discharged" if the resting voltage is less than 11.6 V.

WARNING

Do not check or charge a Battery - A- when the visual indicator has »no color or is bright yellow«. Jump starting must not be used!

There is a risk of explosion during testing, charging or jump starting.

These Batteries - A- must be replaced.

Caution

- *Severely discharged Batteries - A- freeze earlier.*
- *Batteries - A- that have frozen must no longer be used.*

Protected by copyright. Copying for private or commercial purposes, in part or in whole, is not permitted unless authorised by Volkswagen AG. Volkswagen AG does not guarantee or accept any liability with respect to the correctness of information in this document. Copyright by Volkswagen AG.

Note

- *Batteries - A- that have not been used for a long time will discharge by themselves.*
- *In severely discharged Batteries - A- , the electrolyte consists almost completely of water, because the acid portion has been greatly reduced.*
- *Severely discharged Batteries - A- become sulfated, meaning all of the plate surfaces of the Batteries - A- harden.*
- *The sulfation process may be reversed if a severely discharged Battery - A- is recharged immediately.*
- *If the Battery - A- is not recharged, the plates will continue to harden, and the ability to accept a charge will decrease. This results in reduction of battery performance.*
- *Severely discharged Batteries - A- in vehicles must be replaced prior to delivery. Pre-existing damage cannot be ruled out.*

Procedure

– Check the Battery - A- resting voltage. Refer to ⇒ “3 Battery, Charging”, page 31 .

– Charge the Battery - A- :

- Battery Charger - VAS5095A- . Refer to ⇒ “3.1.4 Severely Discharged Battery, Charging with Battery Charger VAS5059A ”, page 34 .
- Battery Charger - VAS5900- . Refer to ⇒ “3.2.5 Severely Discharged Battery, Charging with Battery Charger VAS5900 ”, page 43 .
- Battery Charger - VAS5903- . Refer to ⇒ “3.3.5 Severely Discharged Battery, Charging with Battery Charger VAS5903 ”, page 54 .
- Battery Charger - VAS5906- . Refer to ⇒ “3.4.3 Battery, Charging with Battery Charger VAS5906 ”, page 60 .
- Battery Tester Charger Kit - GRX3000VAS- . Refer to ⇒ “3.5.3 Battery, Charging with Battery Tester Charger Kit GRX3000VAS ”, page 63 .

Protected by copyright. Copyright by Volkswagen AG. Distribution and storage on any electronic media is prohibited. Volkswagen AG does not guarantee or accept any liability with respect to the correctness of information in this document. Copyright by Volkswagen AG. Protected by copyright. Copying for private or commercial purposes, in part or in whole, is not permitted unless authorised by Volkswagen AG.

4 Cruise Control System

⇒ “4.1 Cruise Control System Function”, page 70

⇒ “4.2 Cruise Control System, Activating and Deactivating”, page 70

4.1 Cruise Control System Function

General Information

Cruise control system functions are controlled by the Engine Control Module - J623- .

Cruise Control System, activating and deactivating. Refer to ⇒ “4.2 Cruise Control System, Activating and Deactivating”, page 70 .

DTC Recognition and Display

Malfunctions in relation to the cruise control system are sent via the Engine Control Module - J623- .

Use Vehicle Diagnostic Tester in “Guided Fault Finding” mode.

4.2 Cruise Control System, Activating and Deactivating

Procedure

– Connect Vehicle Diagnostic Tester . Refer to ⇒ “1 Vehicle Diagnosis, Testing and Information Systems”, page 89 .

– Select `Guided Fault Finding`.

– Use the `GO TO` button to select the “function/component selection” and the following menu options one after the other:

- Powertrain
- Engine code
- 01 - OBD-capable systems
- Engine control module or diesel direct injection and pre-glow system
- Functions
- Cruise Control System, Activating and Deactivating

Protected by copyright. Copying for private or commercial purposes, in part or in whole, is not permitted unless authorised by Volkswagen AG. Volkswagen AG does not guarantee or accept any liability with respect to the correctness of information in this document. Copyright by Volkswagen AG.

5 Special Tools

Special tools and workshop equipment required

- Analog/Digital Multimeter - FLU83III-

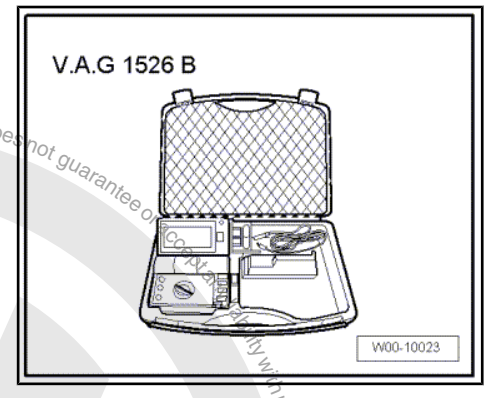

- Battery Charger - VAS5095A-

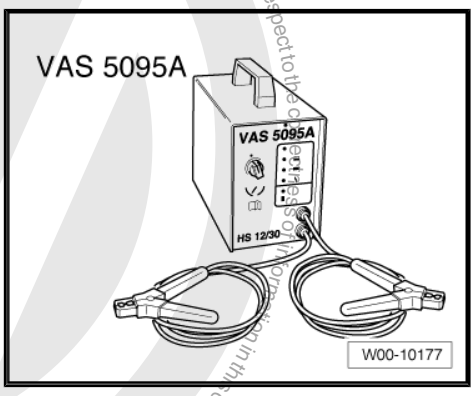

- Battery Tester with Printer - VAS5097A-

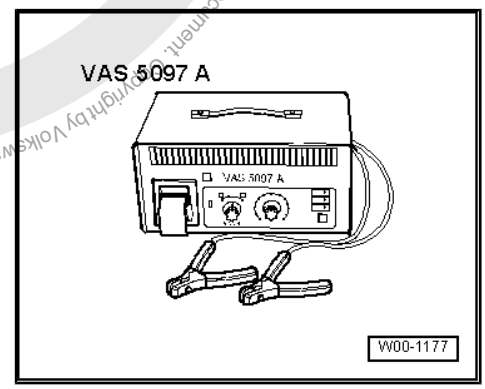

- Battery Charger - VAS5900-

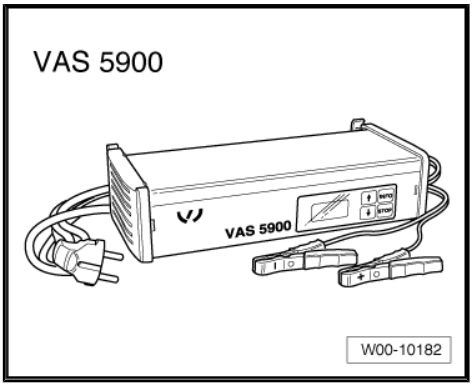

Protected by copyright. Copying for private or commercial purposes, in part or in whole, is not permitted unless authorised by Volkswagen AG. Volkswagen AG does not guarantee or accept any liability with respect to the correctness of information in this document. Copyright by Volkswagen AG.

- Battery Charger - VAS5903-

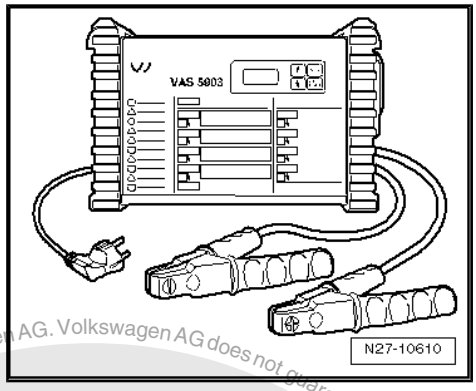

- Battery Charger - VAS5906-

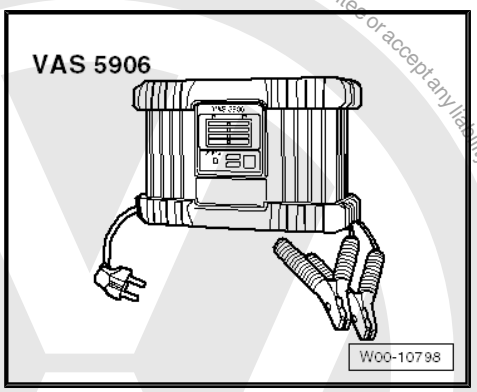

- Solar Battery Maintainer - VAS6102A-

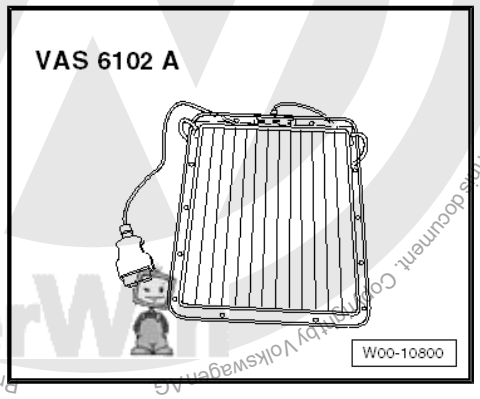

- Battery Tester - VAS6161-

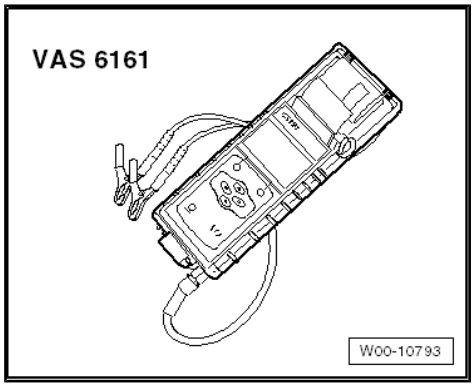

Protected by copyright. Copying for private or commercial purposes, in part or in whole, is not permitted unless authorised by Volkswagen AG. Volkswagen AG does not guarantee or accept any liability with respect to the correctness of information in this document. Copyright by Volkswagen AG

92 – Wiper/Washer Systems

1 Washer Fluid Hoses

⇒ "1.1 Windshield and Rear Window Washer System", page 73

⇒ "1.2 Headlamp Washer System", page 74

⇒ "1.3 Washer Fluid Hoses, Servicing", page 74

1.1 Windshield and Rear Window Washer System

Procedure

– Loosen the connection by pulling both halves of the coupling apart (no fuse).

– To secure the connection, push both halves of coupling together until felt and heard to engage.

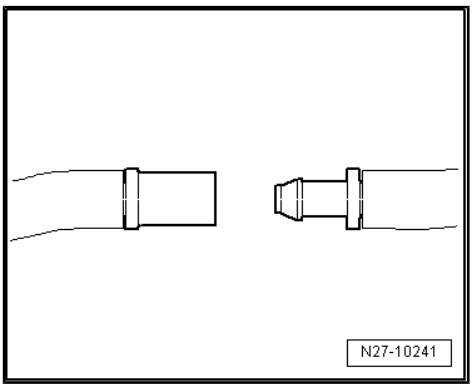

– Disconnect by turning the locking ring -1- 90° -arrow- and removing the hose connection.

– Reconnect by pushing both halves of coupling together and rotating locking ring -1- in the direction of the -arrow- until it engages.

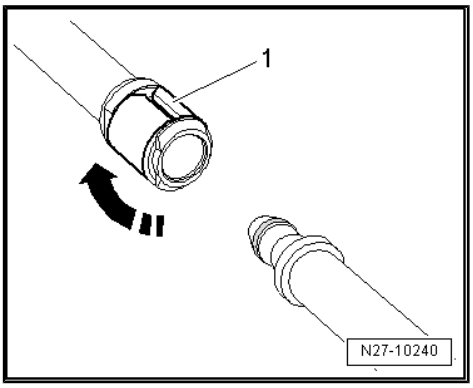

– Disconnect by lifting securing clip -1- approximately 1 mm -arrow- and removing the hose connection.

– To secure the connection, connect the hose connection and press in securing clip -1- until it engages.

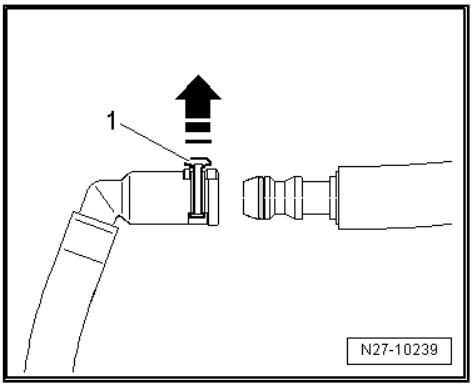

Protected by copyright. Copyright by Volkswagen AG.

– To loosen the connection, pull the securing clip -1- in the direction of -arrow- and disconnect the hose connection.

– To secure connection, connect hose connection and press in securing ring -1- until it engages.

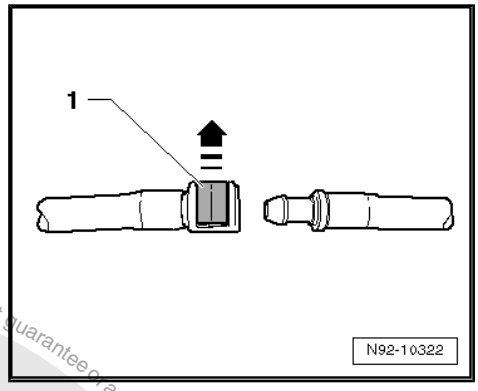

1.2 Headlamp Washer System

Procedure

– To loosen connection, press securing clip -1- in the direction of -arrow- and disconnect the hose connection.

– To secure the connection, hold the securing clip -1- in the direction of the -arrow- and connect the hose connection. Check the securing clip for secure locking by attempting to pull it off without depressing the clip.

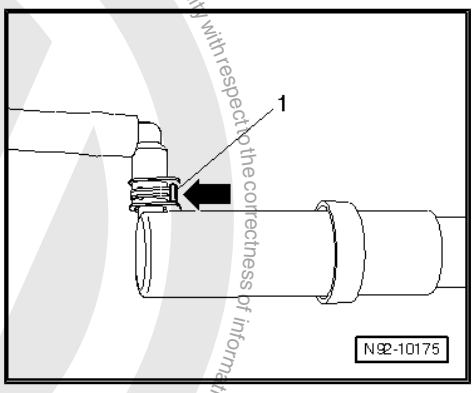

1.3 Washer Fluid Hoses, Servicing

⇒ “1.3.1 General Information”, page 74

⇒ “1.3.2 Smooth Tube, Repairing”, page 74

⇒ “1.3.3 Corrugated Tube, Repairing”, page 75

1.3.1 General Information

A new repair concept has been developed for repairing washer system hoses. Various individual hose connectors, adapters, Ethylene Propylene Diene Methylene (EPDM) rubber hoses and shrink tubing will be offered as replacement parts.

♦ Replacement parts are found in the Parts Catalog.

♦ The replacement parts are available both for the repair of a smooth tube as well as for the repair of a corrugated tube.

1.3.2 Smooth Tube, Repairing

Smooth tubes with a diameter of 5 x 1 mm or 6 x 1 mm can be repaired with a EPDM repair hose section.

Procedure

– Cut out the damaged sections of the smooth tube to be repaired.

Protected by copyright. Copyright for private or commercial purposes, in part or in whole, is not permitted unless authorised by Volkswagen AG. Volkswagen AG does not guarantee or accept any liability with respect to the correctness of information in this document. Copyright by Volkswagen AG.

– Select the appropriate EPDM hose -2- and cable tie. Refer to the Parts Catalog.

– Cut a length of EPDM-hose -2-, so that the smooth tube ends -1- and -3- can be pushed approximately 10 mm into the EPDM-hose -2-.

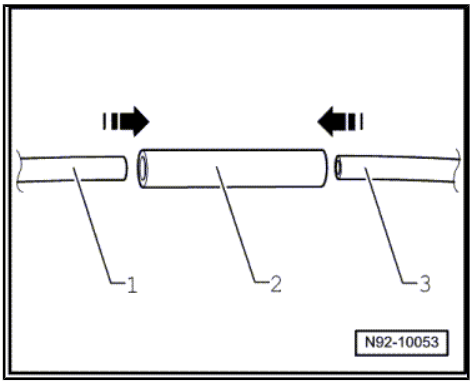

– Secure with cable ties as illustrated -1-.

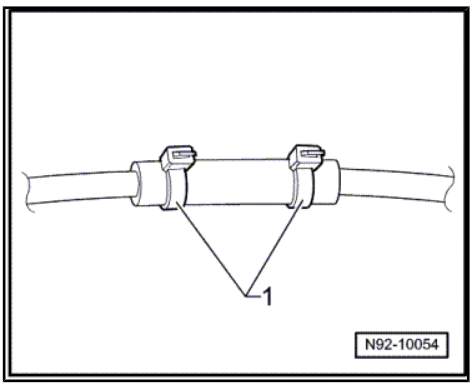

1.3.3 Corrugated Tube, Repairing

Special tools and workshop equipment required

♦ Hot Air Blower - VAS5179-

Note

♦ *Area to be repaired must not be under stress of stretching or bending.*

♦ *If the damaged area is longer than 20 mm, a new section of corrugated hose must be inserted and the procedure described in the following must be performed twice.*

Procedure

– Trim and remove damaged sections of the corrugated tube.

– Choose matching repair adapters -2- and -3- as well as appropriate heat-shrink tubing from the Parts Catalog.

– Warm the end of the corrugated tube -1- using the Hot Air Blower - VAS5179- .

– Press the connecting piece -2- into the corrugated tube -2- -arrow A-.

– Warm the end of the corrugated tube -4- using the Hot Air Blower - VAS5179- .

– Press the connecting piece -3- into the corrugated tube -4- -arrow B-.

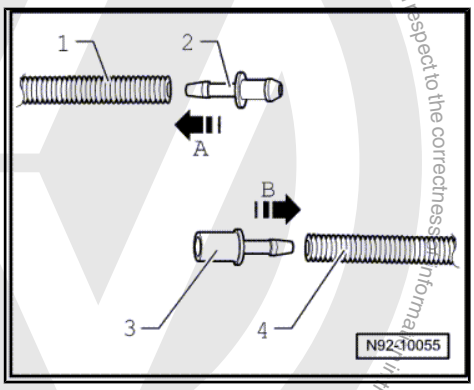

Protected by copyright. Copying for private or commercial purposes, in part or in whole, is not permitted unless authorised by Volkswagen AG. Volkswagen AG does not guarantee or accept any liability with respect to the correctness of information in this document. Copyright by Volkswagen AG.

– Trim the heat-shrink sleeve so that corrugated tube is covered on both sides with a minimum of 20 mm -dimension x- of heat-shrink sleeve.

– Slide the heat-shrink tubing over the corrugated tube, attach the connecting pieces together and secure the repair area with heat-shrink tubing.

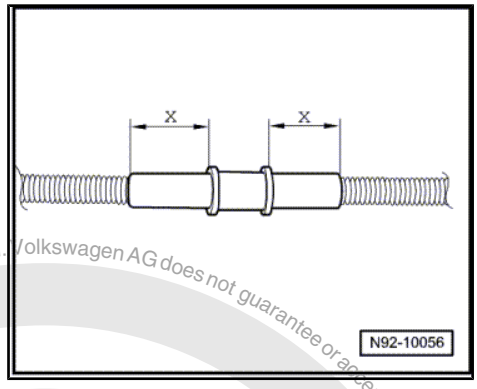

Protected by copyright. Copying for private or commercial purposes, in part or in whole, is not permitted unless authorised by Volkswagen AG. Volkswagen AG does not guarantee or accept any liability with respect to the correctness of information in this document. Copyright by Volkswagen AG.

Protected by copyright. Copying for private or commercial purposes, in part or in whole, is not permitted unless authorised by Volkswagen AG. Volkswagen AG does not guarantee or accept any liability with respect to the correctness of information in this document. Copyright by Volkswagen AG.

2 Joint-Free Wiper Blade Characteristics

⇒ "2.1 Joint-Free Wiper Blade Characteristics", page 77

2.1 Joint-Free Wiper Blade Characteristics

Characteristics for Bosch and Federal Mogul

Check the manufacturer when replacing the wiper blades. Always replace them with blades made by the same manufacturer.

The wiper blades can be identified by the wiper arm mount.

Bosch Wiper Blades -1 and 2-:

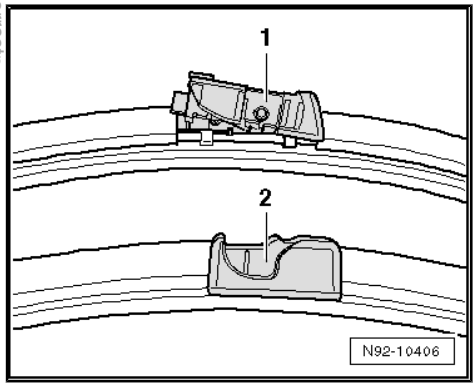

Federal Mogul Wiper Blades -1-:

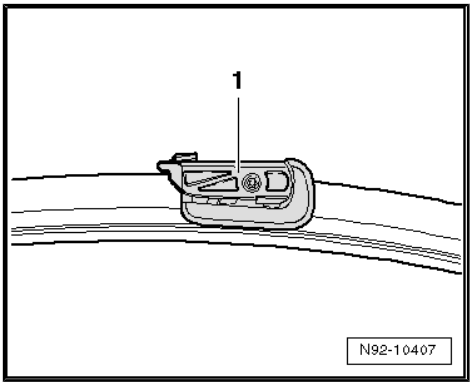

3 Special Tools

Special tools and workshop equipment required

- Hot Air Blower - VAS5179- or

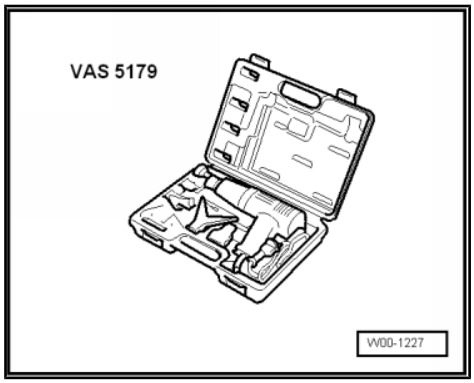

Protected by copyright. Copying for private or commercial purposes, in part or in whole, is not permitted unless authorised by Volkswagen AG. Volkswagen AG does not guarantee or accept any liability with respect to the correctness of information in this document. Copyright by Volkswagen AG.

94 – Exterior Lights, Switches

1 HID Headlamp Usage and Safety Precautions

⇒ "1.1 Safety Precautions", page 79

1.1 Safety Precautions

If Performing Assembly Work on HID Headlamps, Note the Following

- Notes on hazardous high voltage/currents. Refer to ⇒ page 79
- Notes on pressure, temperature and radiation/electric arc. Refer to ⇒ page 80
- Assembly notes on HID headlamp bulbs. Refer to ⇒ page 81
- Disposal regulations for HID headlamp bulbs. Refer to ⇒ page 81

Special tools and workshop equipment required

- Protective eyewear
- Gloves

WARNING

Always disconnect the Battery - A- before working on any HID headlamp components marked with the yellow high voltage symbols. Refer to ⇒ Electrical Equipment; Rep. Gr. 27 ; Battery; Battery, Removing and Installing .

Then switch the low beams on and back off. This removes any possible residual voltage.

The gas discharge lamp control module should not be operated without the gas-discharge lamp.

Due to the high voltage (over 28000 V when igniting the lamp) and temperatures, the HID headlamp bulb should only be operated inside the headlamp housing.

WARNING

- *Never change an HID headlamp bulb if you are not familiar with the corresponding steps, safety precautions and the tool.*

Warnings for Dangerous High Voltage and Currents

WARNING

Light system control modules, connectors or components in the bulb socket area conduct dangerous high voltage

The control module and igniter may be used only on the HID headlamp bulb.

Protected by copyright. Copying for private or commercial purposes, in part or in whole, is not permitted unless authorised by Volkswagen AG. Volkswagen AG does not guarantee or accept any liability with respect to the correctness of information in this document. Copyright by Volkswagen AG.

WARNING

- *Turn off the ignition and all electrical consumers and remove the ignition key.*
- *When working on headlamp system, ensure all components are without voltage, including relieving residual voltage after switching headlamps off.*
- *Residual voltages are discharged by switching low beam on and off again after ignition key was removed.*
- *Make sure lamps cannot be switched on when working on headlamp system.*

Notes on Pressure, Temperature and Radiation/Glare

WARNING

- *HID Headlamp Bulb must only be operated in headlamp housing (it offers protection against touching extremely hot lamp, absorption of UV radiation, prevention of glare, protection against explosion).*
- *The glass HID headlamp bulbs can become very hot - risk of burning!*
- *Avoid looking directly into light beam, since UV radiation of the HID lamp is approximately 2.5 times higher than that of standard Halogen lamps.*
- *Avoid looking into light beam (risk of glare), it can have lasting negative effects on vision.*

WARNING

- *Avoid contact with burst bulbs.*
- *H7 bulbs and HID bulbs are under pressure and can burst when replaced - danger of injury!*
- *When removing and installing HID bulbs, always wear safety glasses and gloves.*

Protected by copyright. Copyright by Volkswagen AG. Volkswagen AG does not guarantee or accept any liability with respect to the correctness of information in this document. Copyright by Volkswagen AG.

Assembly Instructions on HID Headlamp Bulbs

Caution

- *Before replacing a HID headlamp bulb, the corresponding electrical equipment must always be switched off.*
- *Turn off the ignition and all electrical consumers and remove the ignition key.*
- *Do not touch an HID headlamp bulb with bare hands, use clean gloves. The remaining fingerprint would evaporate due to the heat of the operated HID headlamp bulb and condense on the reflector which would impair headlamp luminosity.*
- *An HID headlamp bulb must be replaced with an HID headlamp bulb of the same version. Bulb identification can be found on bulb socket or glass cone.*
- *Harness connectors must engage correctly when installed and must be checked for proper connection.*

Disposal Regulations for HID Headlamp Bulbs

WARNING

- *HID lamps must be disposed of as hazardous waste, never dispose of HID lamps via domestic waste.*
- *HID lamps contain metallic mercury (Hg) and traces of thallium, they must not be destroyed.*
- *These components must be returned for proper recycling in accordance with national legislation.*
- *Dispose of only in the designated containers at the responsible collection point.*

Protected by copyright. Copying for private or commercial purposes, in part or in whole, is not permitted unless authorised by Volkswagen AG. Volkswagen AG does not guarantee or accept any liability with respect to the correctness of information in this document. Copyright by Volkswagen AG.

96 – Interior Lights, Switches

1 Cigarette Lighter and Socket

⇒ “1.1 Overview - Cigarette Lighter, 12 V Socket”, page 82

⇒ “1.2 Cigarette Lighter U1 , Removing and Installing”, page 83

⇒ “1.3 Socket Illumination Bulb L42 , Removing and Installing”, page 86

⇒ “1.4 Cigarette Lighter Illumination Bulb L28 , Removing and Installing”, page 86

1.1 Overview - Cigarette Lighter, 12 V Socket

Caution

Using force to remove Sockets - U- without Socket Illumination Bulb - L42- can result in damage to the mounting sleeve retainers.

Using the Cigarette Lighter Release Tool - T40148- , only the Sockets - U- (Cigarette Lighter - U1-) with the Socket Illumination Bulb - L42- can be removed.

The Cigarette Lighter Release Tool - T40148- cannot release the tabs on Sockets - U- without illumination.

Sockets - U- without a Socket Illumination Bulb - L42- usually get damaged when being removed.

Protected by copyright. Copying for private or commercial purposes, in part or in whole, is not permitted unless authorised by Volkswagen AG. Volkswagen AG does not guarantee or accept any liability with respect to the correctness of information in this document. Copyright by Volkswagen AG.

Protected by copyright. Copyright by Volkswagen AG. Volkswagen AG does not guarantee or accept any liability with respect to the correctness of information in this document. Copying for private or commercial purposes, in part or in whole, is not permitted unless authorized by Volkswagen AG.

1 - Cigarette Lighter Socket with Trailing Cable

2 - Cigarette Lighter - U1-

- ❑ Removing and installing. Refer to ⇒ "1.2 Cigarette Lighter U1 , Removing and Installing", page 83

3 - Socket - U-

- ❑ Removing and installing. Refer to ⇒ "1.2 Cigarette Lighter U1 , Removing and Installing", page 83

4 - Cigarette Lighter Receptacle

5 - Mounting Sleeve

6 - Socket Illumination Bulb - L42-

- ❑ 12 V/1.2 W bulb
- ❑ Removing and installing. Refer to ⇒ "1.3 Socket Illumination Bulb L42 , Removing and Installing", page 86

7 - Bulb Holder

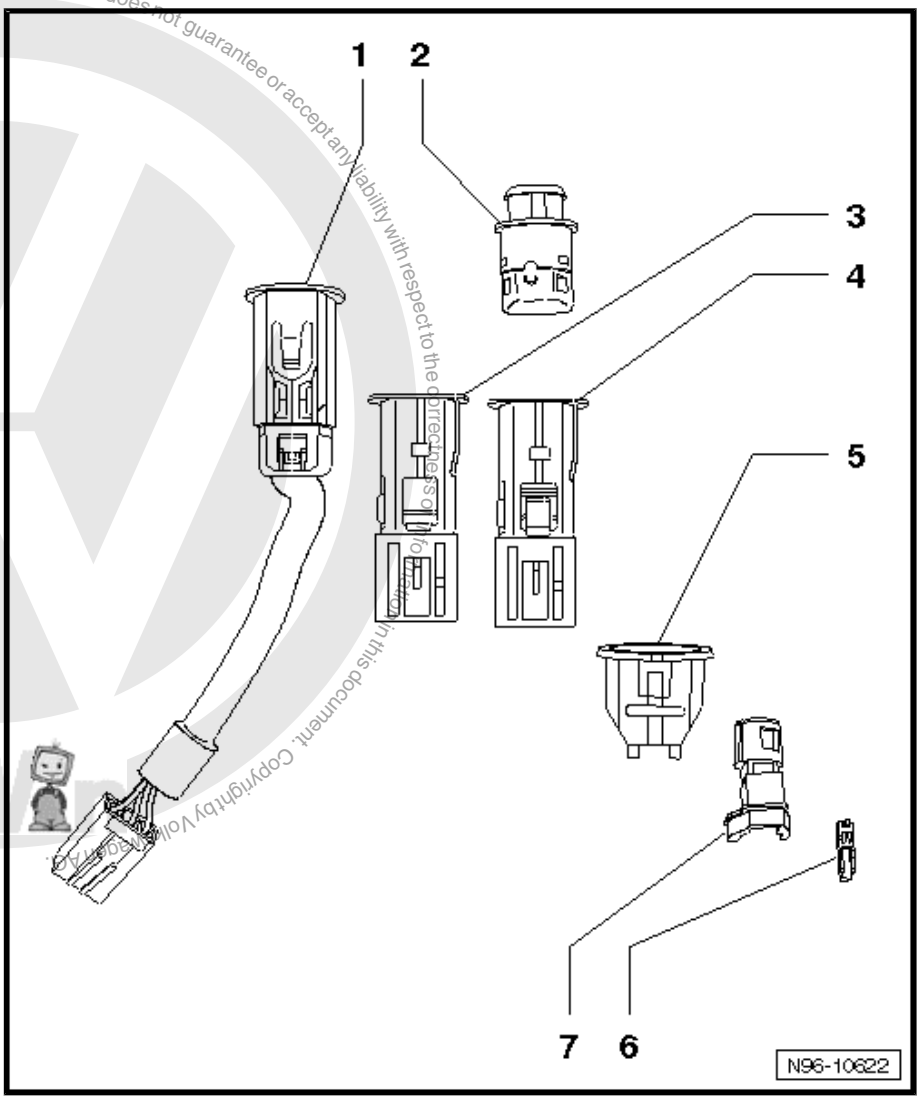

1.2 Cigarette Lighter - U1- , Removing and Installing

Special tools and workshop equipment required

- Cigarette Lighter Release Tool - T40148-
- Cigarette Lighter Release Tool - Thrust Piece - T40148/1-

> ⚠ **Caution**
>
> *Using force to remove Sockets - U- without Socket Illumination Bulb - L42- can result in damage to the mounting sleeve retainers.*
>
> *Using the Cigarette Lighter Release Tool - T40148- , only the Sockets - U- (Cigarette Lighter - U1-) with the Socket Illumination Bulb - L42- can be removed.*
>
> *The Cigarette Lighter Release Tool - T40148- cannot release the tabs on Sockets - U- without illumination.*
>
> *Sockets - U- without a Socket Illumination Bulb - L42- usually get damaged when being removed.*

Note

The procedure for removing and installing is the same for all Sockets - U- and is only described for the cigarette lighter socket.

Removing

– Disconnect the Battery - A- . Refer to ⇒ Electrical Equipment; Rep. Gr. 27 ; Battery; Battery, Disconnecting and Connecting .

– Remove the Cigarette Lighter - U1- from the Socket - U- .

Note

The illustration shows the Socket - U- removed.

Caution

The Socket - U- or mounting sleeve can be damaged.

Make sure the Cigarette Lighter Release Tool - T40148- is seated properly or the mounting sleeve retaining tabs will not release.

– Slide the Cigarette Lighter Release Tool - T40148- -arrow- into the Socket - U- so that the tabs -1- engage in the openings -2-.

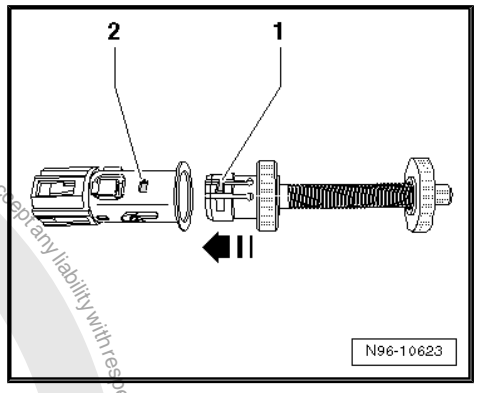

– Release the mounting sleeve retaining tabs by pulling on grip piece -3- in the direction of the -arrow-.

– Remove the Socket - U- from the mounting sleeve using the Cigarette Lighter Release Tool - T40148- .

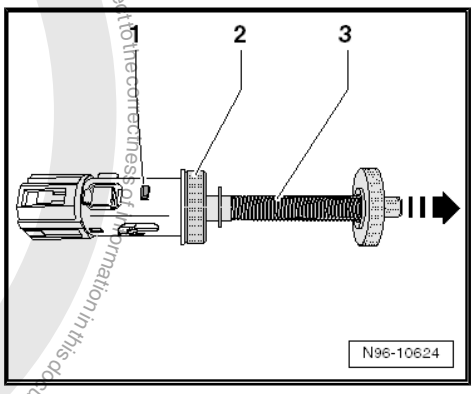

Caution

The wiring for the Socket - U- could get damaged.

Pay attention to the length of electrical wiring when removing the Socket - U- .

Protected by copyright. Copying for private or commercial purposes, in part or in whole, is not permitted unless authorised by Volkswagen AG. Volkswagen AG does not guarantee or accept any liability with respect to the correctness of information in this document. Copyright by Volkswagen AG.

Protected by copyright. Copying for private or commercial purposes, in part or in whole, is not permitted unless authorised by Volkswagen AG. Volkswagen AG does not guarantee or accept any liability with respect to the correctness of information in this document. Copyright by Volkswagen AG.

Depending on installation location, the Thrust Piece - T40148/1- -2- with knurled nut -1- can be used.

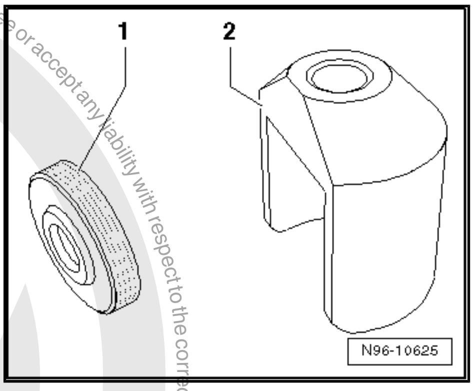

> **Caution**
>
> *Make sure not to damage any of the surrounding components when using the Thrust Piece - T40148/1- .*

– Release and disconnect the connector for the Socket - U- .

Note

There are different versions of the Socket - U- and cigarette lighter socket due to different installation locations and construction. The differences are primarily In the length and type of electrical connectors. For Sockets - A- and cigarette lighter sockets with a trailing cable, additional work may be necessary to access the connector.

– Release the Cigarette Lighter Release Tool - T40148- tabs by pressing the spindle -1- in the direction of the -arrow B-. Then turn the Cigarette Lighter Release Tool - T40148- -2- slightly to the left direction of -arrow A- and release. Remove the Cigarette Lighter Release Tool - T40148- from the Socket - U- .

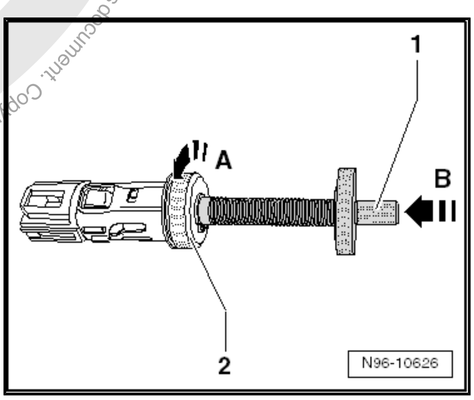

Note

Make sure the tabs on the Cigarette Lighter Release Tool - T40148- are not spread.

> **Caution**
>
> *The Cigarette Lighter - U1- can be ejected from the Socket - U- after the heating cycle is complete.*
>
> *Inserting the Cigarette Lighter Release Tool - T40148- into the Socket - U- spreads the socket retainer springs and reduces their ability to retain the cigarette lighter insert.*
>
> *After removing the Socket - U- , carefully press the retainer springs slightly together again and check if the Cigarette Lighter - U1- remains in the socket when the heating cycle is complete.*

– Carefully press the retainer springs for the Socket - U- together -arrows-.

– Make sure the Cigarette Lighter - U1- remains in the socket and is not ejected into vehicle interior after the heating cycle is complete.

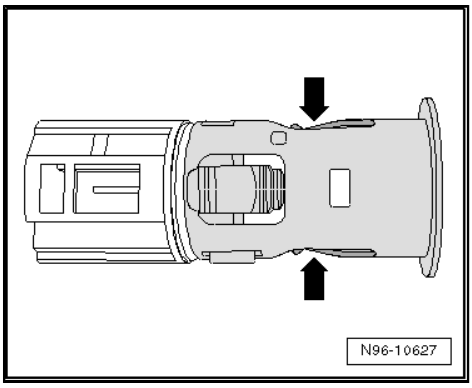

Installing

Install in reverse order of removal.

– Connect the Battery - A- . Refer to ⇒ Electrical Equipment; Rep. Gr. 27 ; Battery; Battery, Disconnecting and Connecting .

1.3 Socket Illumination Bulb - L42- , Removing and Installing

The Socket Illumination Bulb - L42- is removed in the same manner as the Cigarette Lighter Illumination Bulb - L28- . Refer to ⇒ “1.4 Cigarette Lighter Illumination Bulb L28 , Removing and Installing”, page 86 .

1.4 Cigarette Lighter Illumination Bulb - L28- , Removing and Installing

The Cigarette Lighter Illumination Bulb - L28- has an LED rather than a bulb on some vehicles. These LEDs are integrated with the illumination housing and cannot be serviced or replaced separately.

There are various versions of adapter sleeves with a bulb: one version with replaceable bulb and one without a replaceable bulb. In this case, the entire illumination housing must be replaced.

Removing

– Remove the Cigarette Lighter - U1- . Refer to ⇒ “1.2 Cigarette Lighter U1 , Removing and Installing”, page 83 .

– Press the tabs -1- in the direction of the -arrow- and remove the mounting sleeve with the bulb holder.

– Unclip bulb holder from mounting sleeve.

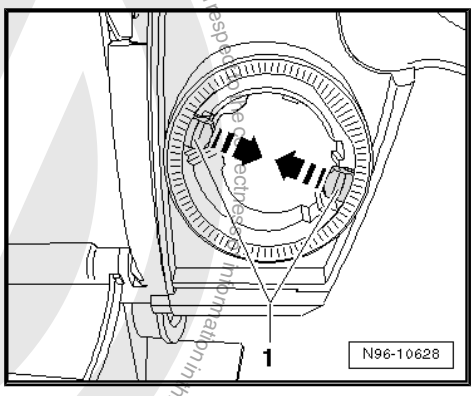

– Disconnect the bulb holder near -A and B-.

– Open the bulb holder component -B-.

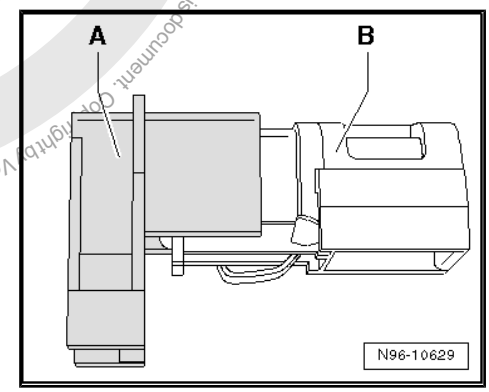

Protected by copyright. Copyright by Volkswagen AG. Volkswagen AG does not guarantee or accept any liability with respect to the correctness of information in this document. Copyright by Volkswagen AG.

– Remove the bulb in the direction of the -arrow-.

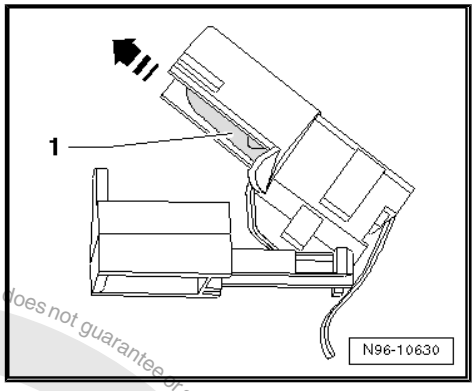

Installing

Install in reverse order of removal.

Protected by copyright. Copying for private or commercial purposes, in part or in whole, is not permitted unless authorised by Volkswagen AG. Volkswagen AG does not guarantee or accept any liability with respect to the correctness of information in this document. Copyright by Volkswagen AG.

2 Special Tools

Special tools and workshop equipment required

- Cigarette Lighter Release Tool - T40148-

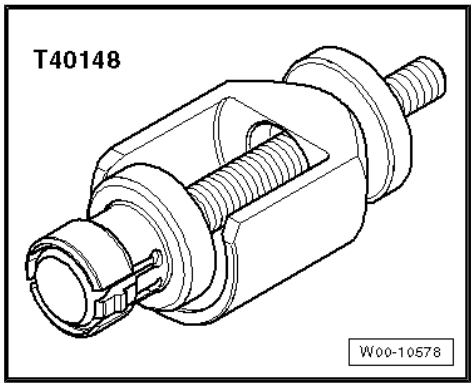

- Cigarette Lighter Release Tool - Thrust Piece - T40148/1-

Protected by copyright. Copying for private or commercial purposes, in part or in whole, is not permitted unless authorised by Volkswagen AG. Volkswagen AG does not guarantee or accept any liability with respect to the correctness of information in this document. Copyright by Volkswagen AG.

97 – Wiring

1 Vehicle Diagnosis, Testing and Information Systems

⇒ "1.1 Description of Vehicle Diagnosis, Testing and Information Systems", page 89

⇒ "1.2 Connect the Vehicle Diagnostic Tester ", page 89

⇒ "1.3 Vehicle Diagnostic Tester, Connecting, Golf MY 1998 through 2003", page 90

1.1 Description of Vehicle Diagnosis, Testing and Information Systems

WARNING

- *Using a Vehicle Diagnostic Tester during a road test can result in injuries if the specified precautions are not followed.*
- *If Vehicle Diagnostic Tester is deposited in the action area of an airbag during a road test, there is the hazard of extreme to lethal injuries in the event the airbag deploys!*
- *During road tests, have a second person sitting in the rear seat operate the Vehicle Diagnostic Tester .*

Note

All work instructions can be reached in the operating modes "Guided Fault Finding" and "Guided Functions".

Additional information:

- ⇒ Self Study Program No. 202 ; Vehicle Diagnostic Tester
- ⇒ Self Study Program No. 256 ; VAS5052
- ⇒ Self Study Program No. 294 ; Online connection of VAS5051
- Follow the current operating instructions for Vehicle Diagnostic Tester , which can be displayed after selecting buttons "Administration" and "Owner's Manual".

Connect Vehicle Diagnostic Tester . Refer to
⇒ "1.2 Connect the Vehicle Diagnostic Tester ", page 89 .

1.2 Connect the Vehicle Diagnostic Tester

Special tools and workshop equipment required

- Vehicle Diagnostic Tester

Note

Follow the current operating instructions for Vehicle Diagnostic Tester , which can be displayed after selecting buttons "Administration" and "Owner's Manual".

Protected by copyright. Copyright for the use of commercial purposes, in part or in whole, is not permitted unless authorised by Volkswagen AG. Volkswagen AG does not guarantee or accept any liability with respect to the correctness of information in this document. Copyright by Volkswagen AG.

Procedure

– Turn off the ignition and all electrical consumers and remove the ignition key.

– On vehicles with automatic transmissions, move the selector lever to the “P” or “N” position.

– On vehicles with manual transmissions, move the shift lever to the neutral position.

– With the ignition switched off, connect the Vehicle Diagnostic Tester to the vehicle diagnostic connection-arrow-.

– Turn on the ignition.

The method for connecting all Vehicle Diagnostic Tester can be derived from the sequence described above.

Component location and connector assignment for the diagnostic connection. Refer to ⇒ Wiring diagrams, Troubleshooting & Component locations.

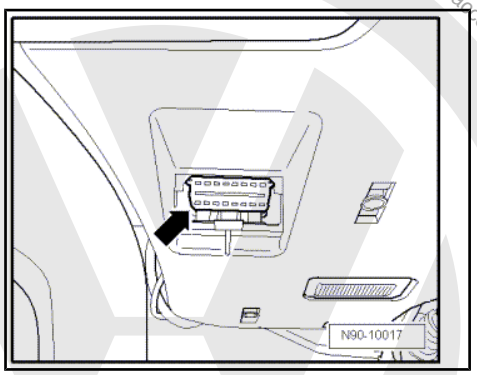

1.3 Vehicle Diagnostic Tester, Connecting, Golf MY 1998 through 2003

Special tools and workshop equipment required

♦ Vehicle Diagnostic Tester

Procedure

– Turn off the ignition and all electrical consumers and remove the ignition key.

– On vehicles with automatic transmissions, move the selector lever to the “P” or “N” position.

– On vehicles with manual transmissions, move the shift lever to the neutral position.

– Remove the trim panel -1- in the direction of the -arrow-.

– With the ignition switched off, connect the Vehicle Diagnostic Tester to the vehicle diagnostic connection.

– Turn on the ignition.

Note

The method for connecting all other Vehicle Diagnostic Tester can be derived from the sequence described above.

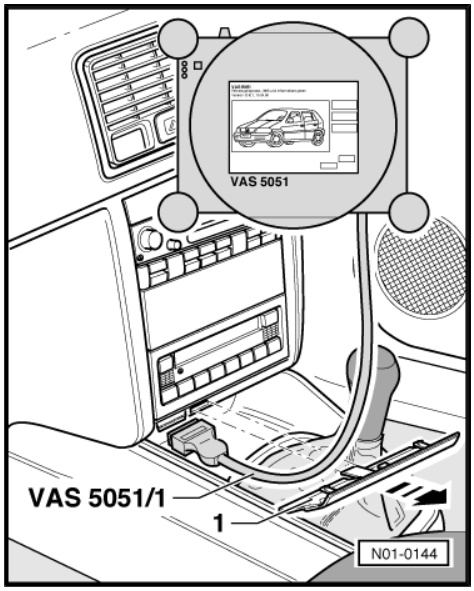

Protected by copyright. Copying for private or commercial purposes, in part or in whole, is not permitted unless authorised by Volkswagen AG. Volkswagen AG does not guarantee or accept any liability with respect to the correctness of information in this document. Copyright by Volkswagen AG.

2 Connectors

⇒ “2.1 Wiring Harnesses and Connectors, Repairing”, page 91

⇒ “2.2 Vehicle Electrical System, General Repair Information”, page 96

⇒ “2.3 Wiring Harnesses, Repairing”, page 98

2.1 Wiring Harnesses and Connectors, Repairing

⇒ “2.1.1 Wiring Harness Repair Set VAS1978 ”, page 91

⇒ “2.1.2 Upgrade Kit For VAS1978 VAS1978/50 ”, page 92

⇒ “2.1.3 Wiring Harness Repair Set VAS1978A ”, page 92

⇒ “2.1.4 Release Tool Set VAS1978/35 ”, page 92

⇒ “2.1.5 Crimping Pliers with Insert”, page 93

⇒ “2.1.6 Contact Release Tools”, page 93

⇒ “2.1.7 Single Wire Seal Assembly Tools”, page 94

⇒ “2.1.8 Wiring Harness Repair Set - Wire Strippers VAS1978/3 ”, page 94

⇒ “2.1.9 Wiring Harness Repair Set - Hot Air Blower VAS1978/14A ”, page 95

⇒ “2.1.10 Crimping Pliers - .35-2.5mm VAS1978/1A ”, page 95

2.1.1 Wiring Harness Repair Set - VAS1978-

The Wiring Harness Repair Set - VAS1978- makes optimal repair quality possible in the realm of vehicle electronics. Using the tools, repairs affecting harness connectors and for breaks in wiring can be performed. For this purpose, complete repair wires with terminals already crimped on are used and can be connected to vehicle-specific wiring harness by the use of crimp connections. Crimping Pliers - VAS1978/1- with Crimping Pliers - Insert 2 - VAS1978/2- and three different crimp slots and a Wiring Harness Repair Set - Hot Air Blower - VAS1978/14A- for shrinking the crimp connections provide a trouble-free electrical connection.

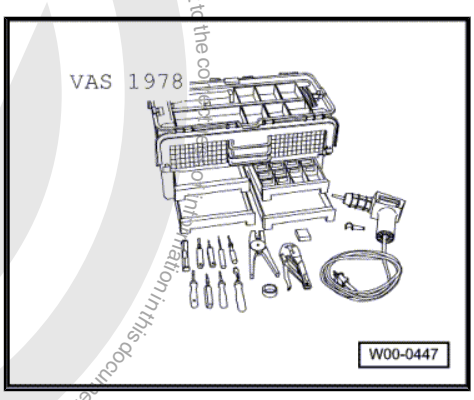

Wiring Harness Repair Set - VAS1978-

Additional information:

- Refer to Wiring Harness Repair Set - VAS1978- Operating Instructions.

Protected by copyright. Copyright by Volkswagen AG. Volkswagen AG does not guarantee or accept any liability with respect to the correctness and completeness of the information in this document. Copyright by Volkswagen AG.

2.1.2 Upgrade Kit For VAS1978 - VAS1978/50-

The Upgrade Kit For VAS1978 - VAS1978/50- is required in order to bring the “old” Wiring Harness Repair Set - VAS1978- up to the new standard of the Wiring Harness Repair Set - VAS1978A- . The Upgrade Kit For VAS1978 - VAS1978/50- contains 4 assembly- and 10 release tools as well as the new Wiring Harness Repair - Crimping Plier - Base Tool - VAS1978/1-2- for crimp connectors with the Wiring Harness Repair - Crimping Head - 0.35-2.5 mm/2 - VAS1978/1-1- , Wiring Harness Repair Set - Crimping Head - 4-6 mm/2 - VAS1978/2A- and the Wiring Harness Repair Set - Crimping Head - JPT - VAS1978/9-1- . Furthermore it contains new stickers, a new set of user instructions, crimp connections for 0.35 mm^2-wire cross sections and a roll of black felt adhesive tape.

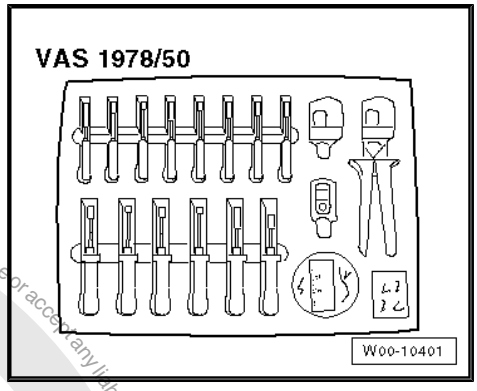

Upgrade Kit For VAS1978 - VAS1978/50-

2.1.3 Wiring Harness Repair Set - VAS1978A-

The new Wiring Harness Repair Set - VAS1978A- makes optimal repair quality possible in the realm of vehicle electronics. Using the new pliers, repairs affecting harness connectors and for breaks in wiring can be performed. For this purpose, complete repair wires with terminals already crimped on are used and can be connected to vehicle-specific wiring harness by the use of the 4 different types of crimp connections. A new Wiring Harness Repair - Crimping Plier - Base Tool - VAS1978/1-2- with exchangeable Wiring Harness Repair - Crimping Head - .35-2.5mm - VAS1978/1-1- or Wiring Harness Repair Set - Crimping Head - 4-6mm - VAS1978/2A- and a Wiring Harness Repair Set - Hot Air Blower - VAS1978/14A- for shrinking the crimp connectors provide a trouble-free electrical connection.

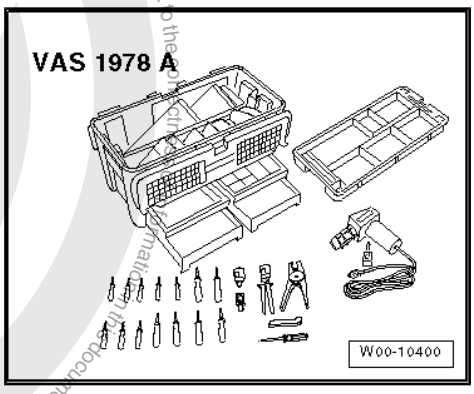

Wiring Harness Repair Set - VAS1978 A-

Additional information:

- Refer to Wiring Harness Repair Set - VAS1978A- Operating Instructions.

The Wiring Harness Repair Set - VAS1978A- was replaced by the Wiring Harness Repair Set - VAS1978B- .

2.1.4 Release Tool Set - VAS1978/35-

The Release Tool Set - VAS1978/35- is used to release the various primary and secondary locking mechanisms on VW-group vehicles. The set consists of 26 different tools with which round connector systems, flat terminals with one or two locks as well as single wire seals can be professionally released and assembled.

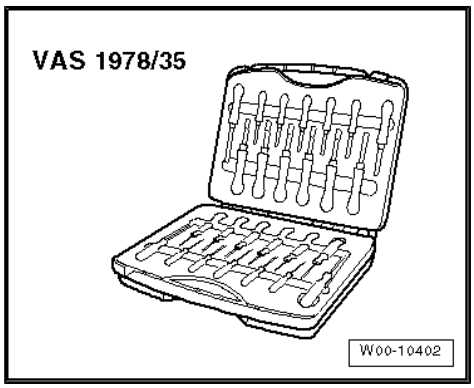

Release Tool Set - VAS1978/35-

The allocation of the correct release tools to the respective locking mechanisms can be found in the table in Release Tool Set - VAS1978/35- Operating Instructions.

Copyright by Volkswagen AG. Protected by copyright. Copying for private or commercial purposes, in whole or in part, is not permitted unless authorized by Volkswagen AG. Volkswagen AG does not guarantee or accept any liability with respect to the correctness of information in this document.

2.1.5 Crimping Pliers with Insert

The Crimping Pliers - VAS1978/1- , with the Crimping Pliers - Insert 2 - VAS1978/2- , is a component of the Wiring Harness Repair Set - VAS1978- / Wiring Harness Repair Set - VAS1978A- / Wiring Harness Repair Set - VAS1978B- and is used to crimp the crimp connectors during the wiring harness repair.

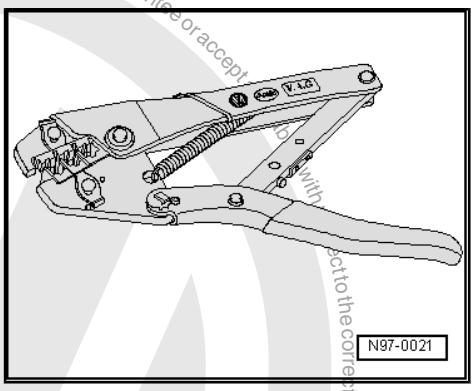

Color of crimp connectors	Color of crimping slot	Wire cross-section
yellow	yellow	0.35 mm^2
Red	Red	0.5 mm^2 through 1.0 mm^2
Blue	Blue	1.5 mm^2 through 2.5 mm^2
yellow	yellow	4.0 mm^2 through 6.0 mm^2

Note

- *The Wiring Harness Repair - Crimping Plier - Base Tool - VAS1978/1-2- can also be used together with the Wiring Harness Repair - Crimping Head - 35-2.5mm - VAS1978/1-1- or Wiring Harness Repair Set - Crimping Head - 4-6mm - VAS1978/2A- to crimp the connections as an alternative.*
- *Always be sure to use the correct crimping slot for the crimp connector used.*
- *Do not crimp wire insulation.*

2.1.6 Contact Release Tools

Various release tools are used to remove the different terminals from the connector housing without damage.

A selection of release tools is a component of the Wiring Harness Repair Set - VAS1978- / Wiring Harness Repair Set - VAS1978A- / Wiring Harness Repair Set - VAS1978B- . The Release Tool Set - VAS1978/35- contains the entire set of release tools.

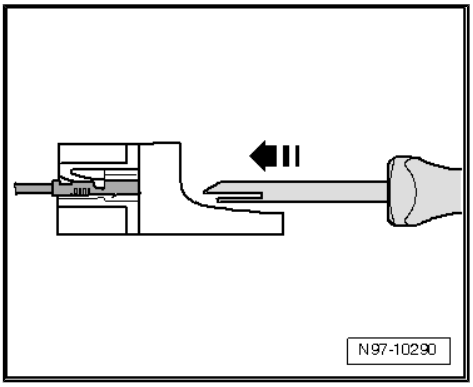

WARNING

Some tools are supplied with a tool safety clip, which is slid over the tool points after using the tool, in order to protect other workers from injuries and tool points from damage.

Protected by copyright. Copyright by Volkswagen AG. Volkswagen AG does not guarantee or accept any liability with respect to the correctness of information in this document. Copyright by Volkswagen AG.

2.1.7 Single Wire Seal Assembly Tools

Assembly tools serve the purpose of allowing the single wire seals to be slid without damage into the connector housing up to stop, this achieves a complete seal between a single wire and connector housing.

Four assembly tools for single wire seals are components of the Wiring Harness Repair Set - VAS1978- / Wiring Harness Repair Set - VAS1978A- / Wiring Harness Repair Set - VAS1978B- .

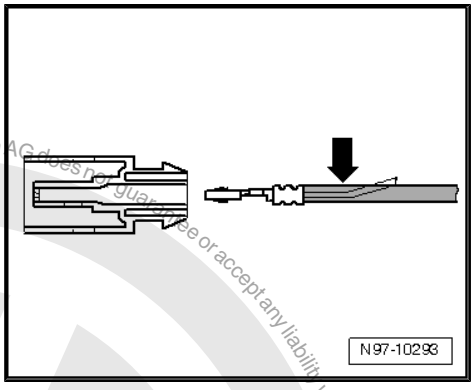

2.1.8 Wiring Harness Repair Set - Wire Strippers - VAS1978/3-

The Wiring Harness Repair Set - Wire Strippers - VAS1978/3- is used for professional stripping and cutting of wires.

The Wiring Harness Repair Set - Wire Strippers - VAS1978/3- are a component of the Wiring Harness Repair Set - VAS1978- / Wiring Harness Repair Set - VAS1978A- / Wiring Harness Repair Set - VAS1978B- .

The Wiring Harness Repair Set - Wire Strippers - VAS1978/3- have an adjustable stop in its pliers-jaws which can be set to the desired length of wire insulation to be removed.

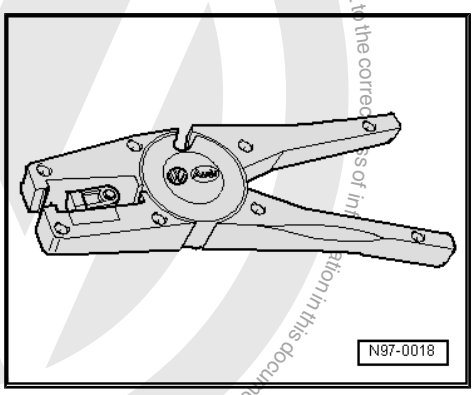

Stripping

– Set the slideable stop in pliers-jaws to the desired length dimension to be stripped.

– Insert the wire end from the front up to the stop into the jaws of pliers and squeeze the Wiring Harness Repair Set - Wire Strippers - VAS1978/3- together completely.

– Reopen the Wiring Harness Repair Set - Wire Strippers - VAS1978/3- and remove the stripped wire end.

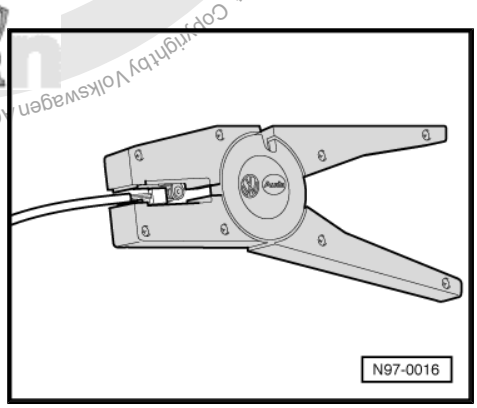

– Cut the wires using the side-cutter function on the top of the Wiring Harness Repair Set - Wire Strippers - VAS1978/3- .

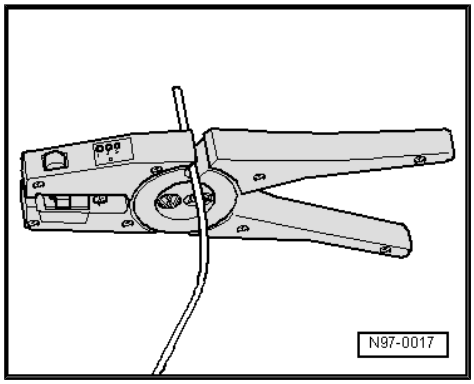

Protected by copyright. Copying for private or commercial purposes, in part or in whole, is not permitted unless authorised by Volkswagen AG. Volkswagen AG does not guarantee or accept any liability with respect to the correctness of information in this document. Copyright by Volkswagen AG.

2.1.9 Wiring Harness Repair Set - Hot Air Blower - VAS1978/14A-

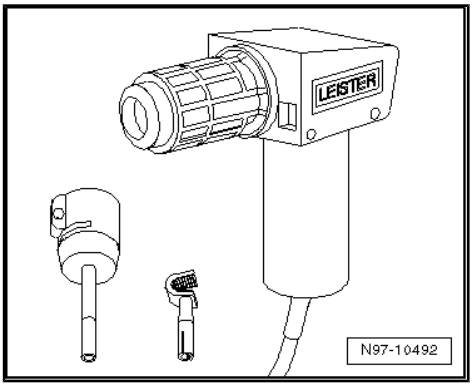

Wiring Harness Repair Set - Hot Air Blower - VAS1978/14A-

> ⚠ **Caution**
>
> ***When heat-shrinking crimp connections, be careful not to damage any other wiring, plastic parts or insulating material with the hot nozzle of the Wiring Harness Repair Set - Hot Air Blower - VAS1978/14A- .***
>
> ***Always follow the Wiring Harness Repair Set - Hot Air Blower - VAS1978/14A- Operating Instructions!***

The Wiring Harness Repair Set - Hot Air Blower - VAS1978/14A- is used together with the Wiring Harness Repair - Blower - Shrink Element - VAS1978/15A- to heat-shrink the crimp connectors. After crimping, the crimp connectors must be heat-shrunk using the Wiring Harness Repair Set - Hot Air Blower - VAS1978/14A- to prevent moisture penetration.

The Wiring Harness Repair Set - Hot Air Blower - VAS1978/14A- is a component of the Wiring Harness Repair Set - VAS1978- / Wiring Harness Repair Set - VAS1978A- / Wiring Harness Repair Set - VAS1978B- .

2.1.10 Crimping Pliers - .35-2.5mm - VAS1978/1A-

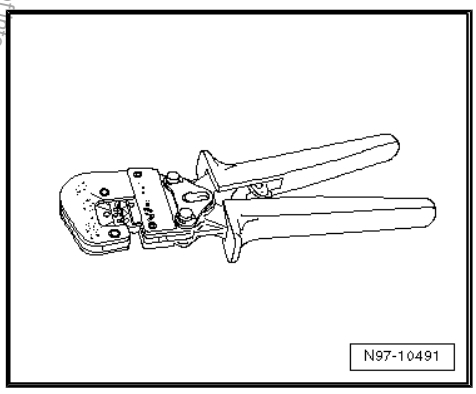

The Crimping Pliers - .35-2.5mm - VAS1978/1A- or the Wiring Harness Repair - Crimping Plier - Base Tool - VAS1978/1-2- together with the Wiring Harness Repair - Crimping Head - . 35-2.5mm - VAS1978/1-1- and the Wiring Harness Repair Set - Crimping Head - 4-6mm - VAS1978/2A- from the wiring harness repair set is used to compress the crimp connectors.

Crimp connectors, press using the Crimping Pliers - .35-2.5mm - VAS1978/1A- .

The following crimping heads are available for the Wiring Harness Repair - Crimping Plier - Base Tool - VAS1978/1-2- :

- ♦ Wiring Harness Repair - Crimping Head - .35-2.5mm - VAS1978/1-1-
- ♦ Wiring Harness Repair Set - Crimping Head - 4-6mm - VAS1978/2 A-
- ♦ Wiring Harness Repair Set - Crimping Head - JPT - VAS1978/9-1-

In conjunction with Wiring Harness Repair Set - Crimping Head - JPT - VAS1978/9-1- , crimping pliers are used to crimp terminals onto individual wires when repairing wiring cross-sections up to 0.35 mm^2 .

Changing Exchangeable Head

– Completely open the Wiring Harness Repair - Crimping Plier - Base Tool - VAS1978/1-2- .

Protected by copyright. Copyright by Volkswagen AG. Volkswagen AG does not guarantee or accept any liability with respect to the correctness of information in this document. Copyright by Volkswagen AG. Protected by copyright. Copyright by Volkswagen AG. Volkswagen AG does not guarantee or accept any liability with respect to the correctness of information in this document. Copyright by Volkswagen AG.

– Disengage both locking pins -arrows- from the Wiring Harness Repair - Crimping Plier - Base Tool - VAS1978/1-2- .

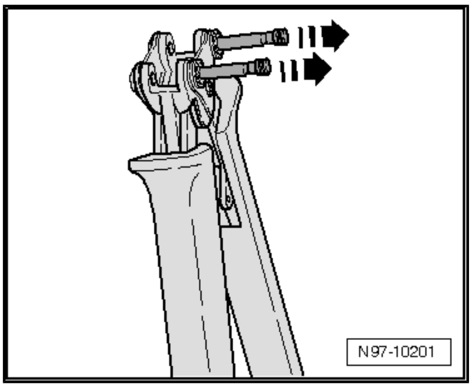

– Insert the required exchangeable head into the Wiring Harness Repair - Crimping Plier - Base Tool - VAS1978/1-2- from above -arrow-.

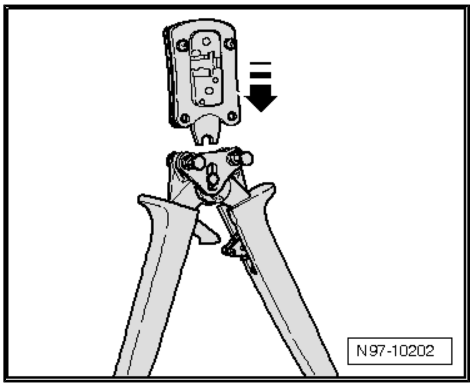

– Lock the exchangeable head by pressing the pins -arrows- into the Wiring Harness Repair - Crimping Plier - Base Tool - VAS1978/1-2- .

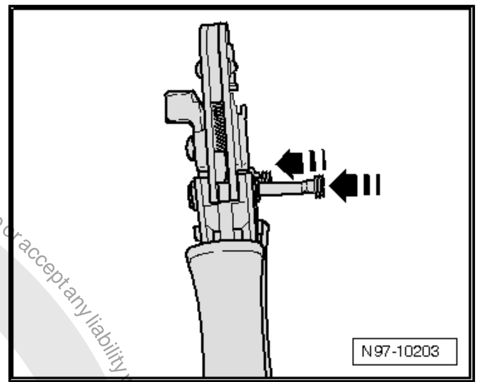

2.2 Vehicle Electrical System, General Repair Information

> ⚠ Caution
>
> *When disconnecting and connecting the Battery - A- , the procedure must be followed as described in the repair manual. Refer to ⇒ Electrical Equipment; Rep. Gr. 27 ; Battery; Battery, Disconnecting and Connecting .*

> ⚠ WARNING
>
> *Some tools are supplied with a tool safety clip, which is slid over the tool points after using the tool, in order to protect other workers from injuries and tool points from damage.*

♦ When performing repairs, always heed any notes, cautions and warnings found in the applicable repair manual.

Protected by copyright. Copying for private or commercial purposes, in part or in whole, is not permitted unless authorised by Volkswagen AG. Volkswagen AG does not guarantee or accept any liability with respect to the correctness of information in this document. Copyright by Volkswagen AG.

- Observe the country-specific requirements.
- Disconnect the Battery - A- before working on the electrical system. Refer to ⇒ Electrical Equipment; Rep. Gr. 27 ; Battery; Battery, Disconnecting and Connecting . By disconnecting the Battery - a- (current disruption), the electrical system is guaranteed to be safe to work on. Disconnecting the positive battery cable is only required when removing the Battery - A- .
- Before beginning repair work, always eliminate any cause of damage (sharp body edges, faulty electrical components, corrosion).
- Further information, for example, installing and removing the individual components, can be found in the appropriate repair manual.
- Soldering is not permissible for repairs to the vehicle electrical system.
- Wiring harness and connector repairs to vehicle electrical system may only be performed using the Wiring Harness Repair Set - VAS1978- / Wiring Harness Repair Set - VAS1978A- / Wiring Harness Repair Set - VAS1978B- .
- Wiring harness repairs are only to be done using yellow wires.
- Wiring harness repairs may not be performed again in the wrapping of the vehicle-specific wiring harness and are to be marked with yellow adhesive tape.
- These yellow wires and every location on wiring harness wrapped in yellow insulating tape indicates a previous repair.
- Crimp connections must never be repaired. Route a wire parallel to the faulty wire.
- After crimping, the crimp connectors must be heat-shrunk using the Wiring Harness Repair Set - Hot Air Blower - VAS1978/14A- to prevent moisture penetration.
- Always observe the supplementary notes also for repairing wiring harnesses on airbag-system and belt tensioners, fiber optic cables, CAN-Bus wires, antenna wires and wires with cross-sections up to 0.35 mm ^{2}. Refer to ⇒ “2.3.4 Wires with Cross Section up to 0.35 mm 2, Repairing”, page 101 .
- A function test must be performed after every repair. If necessary, check DTC memory, erase and/or bring systems into basic setting.
- If possible, do not loosen ground (GND) straps from body (danger of corrosion).
- Not all wire cross-sections in the vehicle are contained in the Wiring Harness Repair Set - VAS1978B- and its previous versions. If the required wire cross-section is not present, the next greater cross-section must be used.
- Shielded harnesses may not be repaired. If faulty, the entire harness must be replaced.
- Heat-resistant wires have been installed in the vehicle at various locations, mainly in the engine compartment. Heat-resistant wires can be recognized by their somewhat duller and softer insulation. Only heat-resistant wires may be used to repair these wires.

Protected by copyright. Copyright by Volkswagen AG. Volkswagen AG does not guarantee or accept any liability with respect to the correctness of information in this document. Copyright by Volkswagen AG.

2.3 Wiring Harnesses, Repairing

⇒ “2.3.1 Wiring Harnesses, Repair Information”, page 98

⇒ “2.3.2 Airbag and Belt Tensioner Wire Repair Information”, page 98

⇒ “2.3.3 CAN Bus Lines Repair Information”, page 100

⇒ “2.3.4 Wires with Cross Section up to 0.35 mm 2, Repairing”, page 101

⇒ “2.3.5 Wire Break with Single Repair Point”, page 103

⇒ “2.3.6 Wire Break with Dual Repair Point”, page 105

2.3.1 Wiring Harnesses, Repair Information

- Observe general notes for repairs on the vehicle electrical system. Refer to ⇒ “2.2 Vehicle Electrical System General Repair Information”, page 96 .
- Not all wire cross-sections in the vehicle are contained in the Wiring Harness Repair Set - VAS1978- / Wiring Harness Repair Set - VAS1978A- . If the required wire cross-section is not present, the next greater cross-section must be used.
- Wiring harness and connector repairs to vehicle electrical system must only be performed using the Wiring Harness Repair Set - VAS1978- / Wiring Harness Repair Set - VAS1978A- .
- Soldering is not permissible for repairs to the vehicle electrical system.
- Wiring harness repairs are only to be done using yellow wires.
- Wiring harness repairs may not be performed again in the wrapping of the vehicle-specific wiring harness and are to be marked with yellow adhesive tape.
- These yellow wires and every location on wiring harness wrapped in yellow insulating tape indicates a previous repair.
- Crimp connections must never be repaired. Route a wire parallel to the faulty wire.
- After crimping, the crimp connectors must be heat-shrunk using the Wiring Harness Repair Set - Hot Air Blower - VAS1978/14A- to prevent moisture penetration.
- Shielded harnesses may not be repaired. If faulty, the entire harness must be replaced.
- Heat-resistant wires have been installed in the vehicle at various locations, mainly in the engine compartment. Heat-resistant wires can be recognized by their somewhat duller and softer insulation. Only heat-resistant wires may be used to repair these wires.
- Always observe also the supplementary notes for repairing wiring harnesses on airbag- and seat belt tensioner systems, fiber optic cables, CAN bus lines, antenna wires and wires with cross-sections up to 0.35 mm ^{2}.

2.3.2 Airbag and Belt Tensioner Wire Repair Information

In addition to the general repairs on wiring harnesses, the following methods and instructions must be observed for repairs on wiring harnesses for airbag systems and belt tensioners:

Volkswagen AG. Volkswagen AG does not guarantee or accept any liability with respect to the correctness of information in this document. Copyright by Volkswagen AG.

WARNING

- *The airbag system and belt tensioner can fail.*
- *Faulty repairs performed on airbag and seat belt tensioner system can lead to malfunction in passenger protection.*
- *When performing repairs on airbag and seat belt tensioner wiring harness, use only terminals, connectors and wires designated for it. Refer to the Parts Catalog.*

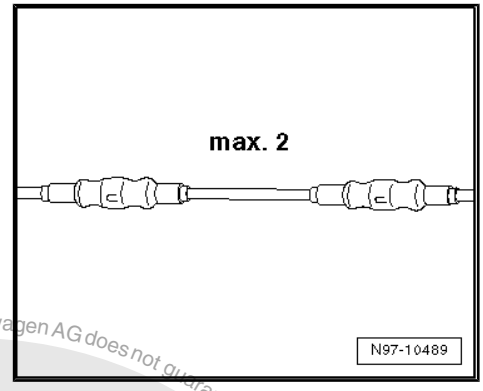

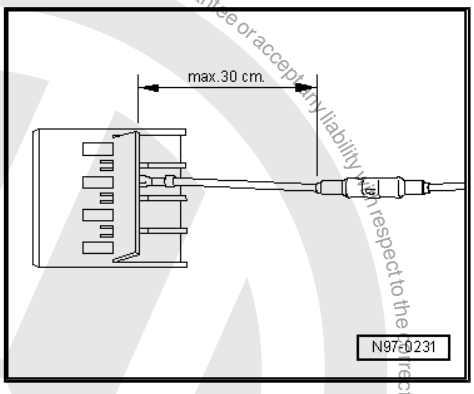

Protected by copyright. Copying for private or commercial purposes, in part or in whole, is not permitted unless authorised by Volkswagen AG. Volkswagen AG does not guarantee or accept any liability with respect to the correctness of information in this document. Copyright by Volkswagen AG.

Copyright by Volkswagen AG. Volkswagen AG does not guarantee or accept any liability with respect to the correctness of information in this document.

- Wires from the airbag and seat belt tensioner wiring harness may only be repaired using the Wiring Harness Repair Set - VAS1978- / Wiring Harness Repair Set - VAS1978A- / Wiring Harness Repair Set - VAS1978B- .
- Pay attention to stickers on vehicle designating high voltage components. When performing repairs, residual voltage must be discharged. Refer to ⇒ Rep. Gr. 00 ; Safety Precautions; Pyrotechnic Components Safety Precautions .
- A maximum of 2 repairs may be performed when repairing wires of airbag- and seat belt tensioner system. Repairs increase the electrical resistance in the wire and may trigger malfunctions in the system On Board Diagnostic (OBD).
- When repairing airbag or safety belt tensioner wiring, crimp connectors must be shrunk to prevent corrosion.
- Wiring harness repairs may only be performed using yellow wires.
- Do not wrap the repair point again into the vehicle-specific wiring harness and mark the repair point very visibly with yellow insulating tape.
- Repairs in the area of the airbag or seat belt tensioner should be performed a maximum of 30 cm from the next connector housing. Together with the identification via yellow insulating tape, this procedure makes it possible to obtain a quick overview of previously performed repairs.
- Wires to the deploying units (airbags) have a wire-twisting with a length of lay of 20 mm ± 5 mm in series production. This length of lay is guaranteed via the norm part numbers for wire pairs in series production and must be observed strictly for the repair lengths of twisted wires.
- During repair work, wires to deploying units (airbags) must have the same length. When twisting together wires -1- and -2-, length of lay of A = 20 mm ± 5 mm must be strictly observed.
- While doing this, no section of the wire also in area of crimp connectors -arrow-, may be greater than B = 100 mm without twisting of the wires.

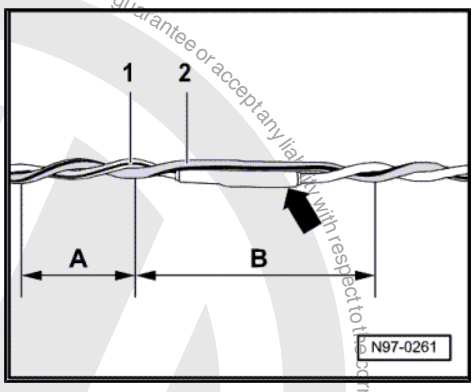

2.3.3 CAN Bus Lines Repair Information

- Unshielded two-strand wiring -1- and -2- with a cross section of 0.35 mm^2 and/or 0.5 mm^2 can be used as CAN bus wiring.
- The color coding of CAN bus lines can be found in the following table:

Powertrain CAN high wire	Orange/black
Comfort CAN high wire	Orange/green
Infotainment CAN high wire	Orange/violet
CAN low wire (all)	Orange/brown

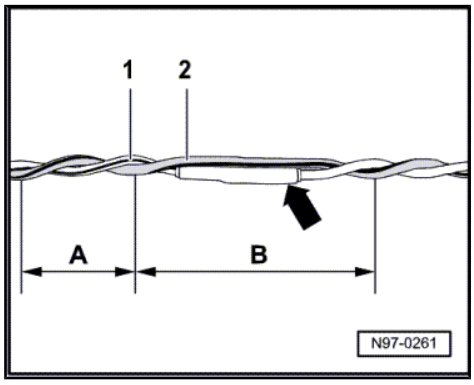

- Repairs on CAN bus lines can be performed using repair wire with matching cross section, and also using twisted wires “green/yellow” and “white/yellow” from the Parts Catalog.
- When repairing CAN bus lines, both wires must be same length. When twisting together wires -1- and -2-, the lay length of A = 20 mm must be observed.
- While doing this, no section of the wire also in area of crimp connectors -arrow-, may be greater than B = 50 mm without twisting of the wires.
- Wrap repair points with yellow adhesive tape to mark a performed repair.

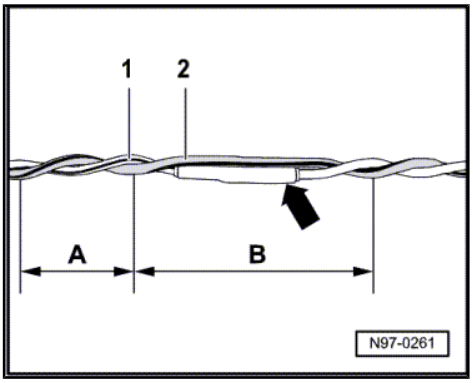

2.3.4 Wires with Cross Section up to 0.35 mm ^{2}, Repairing

When repairing wires with a cross-section up to 0.35 mm^2, new contacts must always be crimped on using the Crimping Pliers - JPT - VAS1978/9A- or the Wiring Harness Repair - Crimping Plier - Base Tool - VAS1978/1-2- with the Wiring Harness Repair Set - Crimping Head - JPT - VAS1978/9-1- installed. Due to the low current strengths of these wires in the micro- to milli- range, contacts crimped on incorrectly lead to continuity resistances and cause malfunctions or failure of the respective system. The most frequent applications of these contacts are:

- Heated Oxygen Sensor
- RPM sensor
- Mass Airflow Sensor

By using the Crimping Pliers - JPT - VAS1978/9A- or the Wiring Harness Repair - Crimping Plier - Base Tool - VAS1978/1-2- with the Wiring Harness Repair Set - Crimping Head - JPT - VAS1978/9-1- installed, the correct connection between crimp contact, wire and single wire seal is guaranteed. The tool is to be used only for the purpose described.

Note

Contacts in a normal and a gold-plated version are crimped onto repair wires. The same version of the contact that was installed at the factory must always be used for repairs.

Crimping A New Contact with Single Wire Seal

– Insert the Wiring Harness Repair Set - Crimping Head - JPT - VAS1978/9-1- into the Wiring Harness Repair - Crimping Plier - Base Tool - VAS1978/1-2- . Refer to ⇒ “2.1.10 Crimping Pliers - .35-2.5mm VAS1978/1A”, page 95 .

Protected by copyright. Copying for private or commercial purposes, in part or in whole, is not permitted unless authorised by Volkswagen AG. Volkswagen AG does not guarantee or accept any liability with respect to the correctness of information in this document. Copyright by Volkswagen AG.

– Place the single wire seal onto the repair wire.

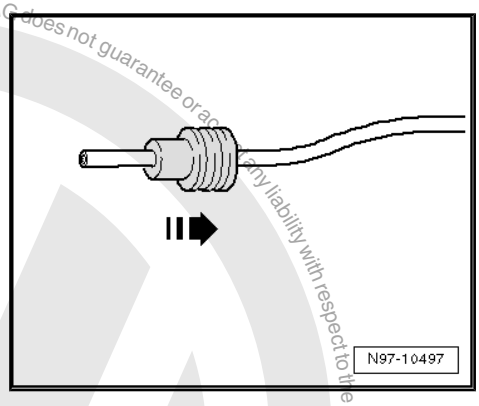

Note

When doing this, the smaller diameter of single wire seal must be facing in the direction of the contact to be crimped on.

– Open the Wiring Harness Repair - Crimping Plier - Base Tool - VAS1978/1-2- (green body) and insert the repair wire end into the stripping slot of the Wiring Harness Repair - Crimping Plier - Base Tool - VAS1978/1-2- .

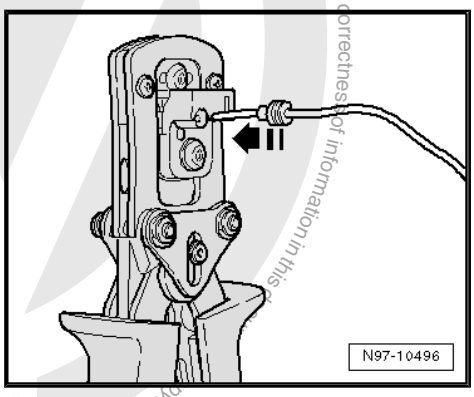

– Close the Wiring Harness Repair - Crimping Plier - Base Tool - VAS1978/1-2- completely.

– Reopen the Wiring Harness Repair - Crimping Plier - Base Tool - VAS1978/1-2- and remove the stripped wire end.

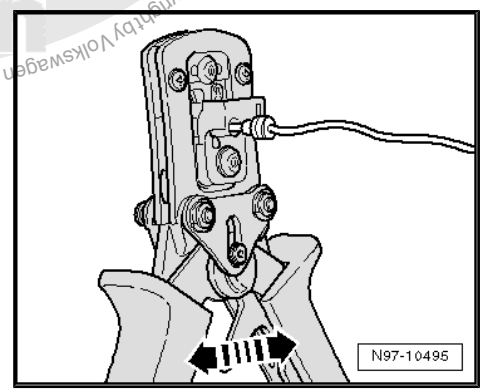

– Slide single wire seal in direction of stripped wire end until it rests flush with the wire insulation.

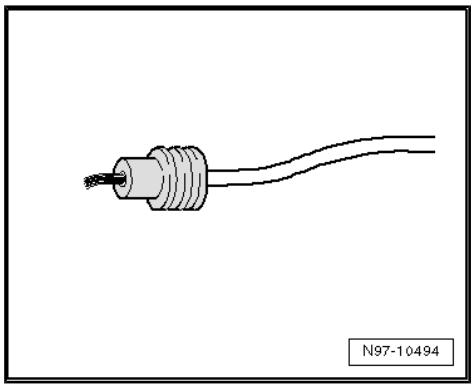

Protected by copyright. Copying for private or commercial purposes, in part or in whole, is not permitted unless authorised by Volkswagen AG. Volkswagen AG does not guarantee or accept any liability with respect to the correctness of information in this copy.

– Insert the new crimp contact into the Wiring Harness Repair - Crimping Plier - Base Tool - VAS1978/1-2- mount.

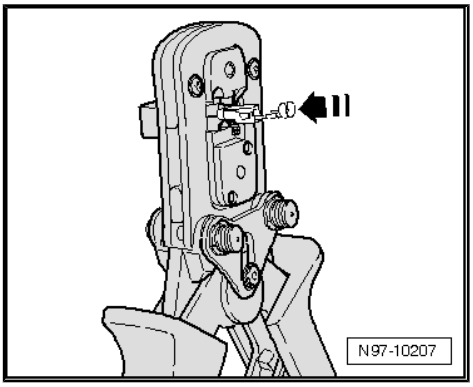

– Insert the stripped wire end with positioned single wire seal into crimp contact until it makes contact on “Wire-Stop”.
– Crimp the contact, wire and single wire seal by completely closing the Wiring Harness Repair - Crimping Plier - Base Tool - VAS1978/1-2- .
– Reopen the Wiring Harness Repair - Crimping Plier - Base Tool - VAS1978/1-2- and remove the finished crimped-on contact.

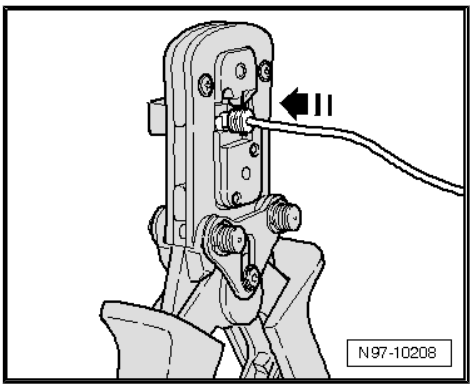

A correctly performed crimp is distinguished by a clean compression of wire and single wire seal in the contact and has an impression on the rear side which identifies that the crimp was performed by a professional using the correct tool.

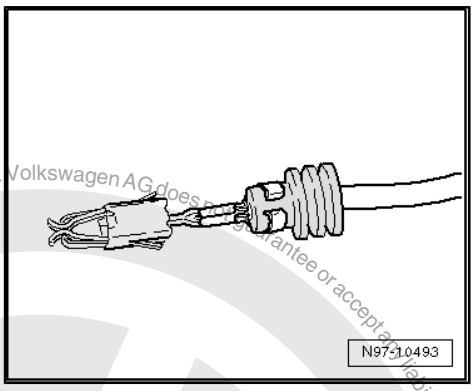

2.3.5 Wire Break with Single Repair Point

Repair Point with Single Crimp Connection

– Free up the wire to be repaired approximately 20 cm on both sides of the repair point.
– If required, remove wiring harness wrapping using a folding knife.

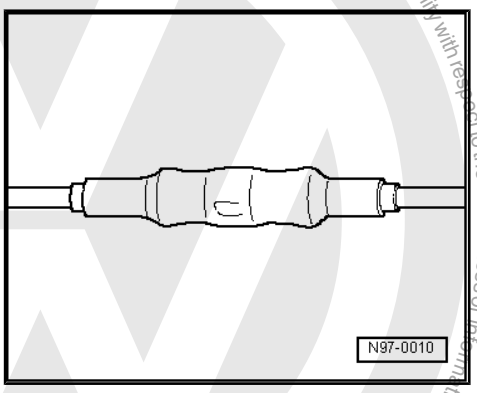

Protected by copyright. Copying for private or commercial purposes, in part or in whole, is not permitted unless authorised by Volkswagen AG. Volkswagen AG does not guarantee or accept any liability with respect to the correctness of information in this document. Copyright by Volkswagen AG.

– Cut out the damaged section of wire using the Wiring Harness Repair Set - Wire Strippers - VAS1978/3- .

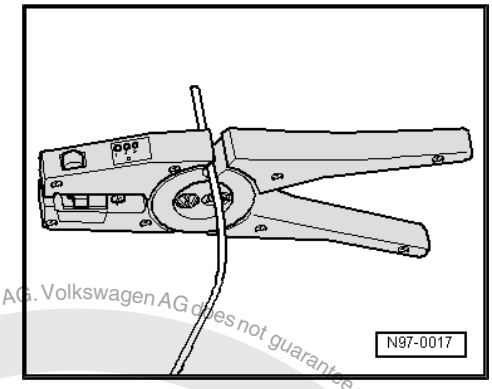

Note

If, by cutting out the damaged wire section, both ends of the vehicle-specific single wire are too short for a repair using a single crimp connector, insert a repair wire section of matching length with two crimp connectors. Refer to
⇒ "2.3.6 Wire Break with Dual Repair Point", page 105 .

– Strip the wire ends 6 to 7 mm using the Wiring Harness Repair Set - Wire Strippers - VAS1978/3- .

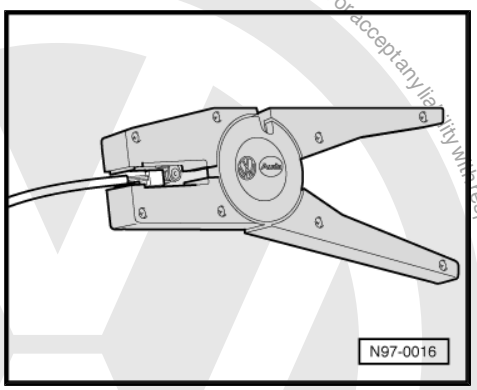

– Slide the crimp connector onto both stripped wire ends of the vehicle-specific single wire and crimp them using the Crimping Pliers - .35-2.5mm - VAS1978/1A-.

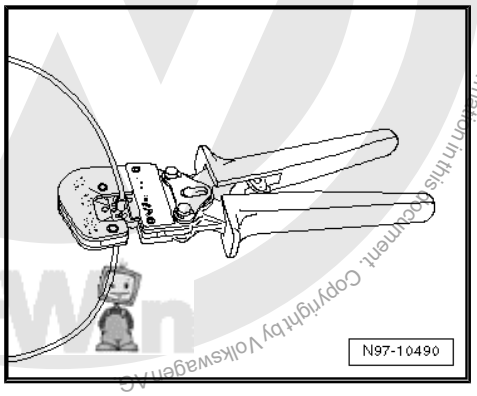

Note

- *Always be sure to use the correct crimping slot for the crimping connection used.*
- *Do not crimp wire insulation.*

After crimping, the crimp connectors must be heat-shrunk using the Wiring Harness Repair Set - Hot Air Blower - VAS1978/14A- to prevent moisture penetration.

– Place the Wiring Harness Repair - Blower - Shrink Element - VAS1978/15A- on the Wiring Harness Repair Set - Hot Air Blower - VAS1978/14A- .

– Heat the crimp connector using the Wiring Harness Repair Set - Hot Air Blower - VAS1978/14A- lengthwise from the center outward until it is sealed completely and the adhesive comes out at the ends.

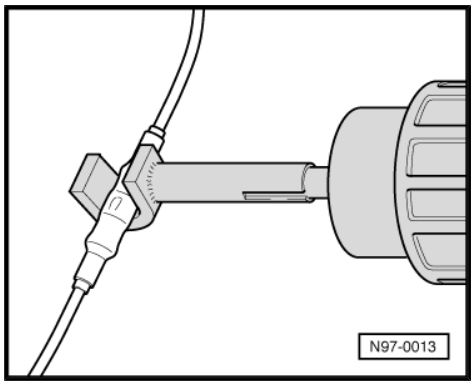

Caution

When heat-shrinking crimp connections, be careful not to damage any other wiring, plastic parts or insulating material with the hot nozzle of the Wiring Harness Repair Set - Hot Air Blower - VAS1978/14A- .

Always follow the Wiring Harness Repair Set - Hot Air Blower - VAS1978/14A- Operating Instructions!

Protected by copyright. Copying for private or commercial purposes, in part or in whole, is not permitted unless authorised by Volkswagen AG. Volkswagen AG does not guarantee or accept any liability with respect to the correctness of information in this document. Copyright by Volkswagen AG.

Note

- *Make sure that crimp connections do not lie directly next to each other when several wires need to be repaired. Arrange the crimp connectors at a slight offset so that the circumference of the wiring harness does not become too large.*
- *In the event the repair point was previous taped, this point must be taped anew with yellow insulating tape after repairs.*
- *Secure the repaired wiring harness with a cable tie to prevent flapping noises while driving.*

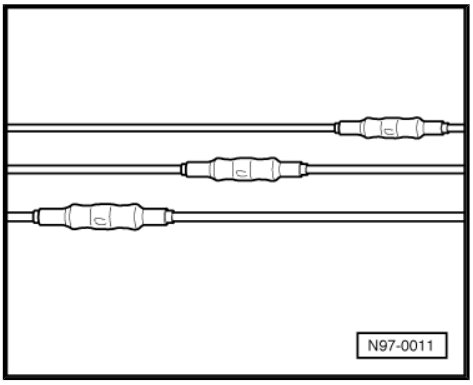

2.3.6 Wire Break with Dual Repair Point

Repair Point with Intermediate Wire Section

– Free up the wire to be repaired at two places (approximately 20 cm on both sides of the respective repair point).

– Remove wiring harness wrapping using a folding knife.

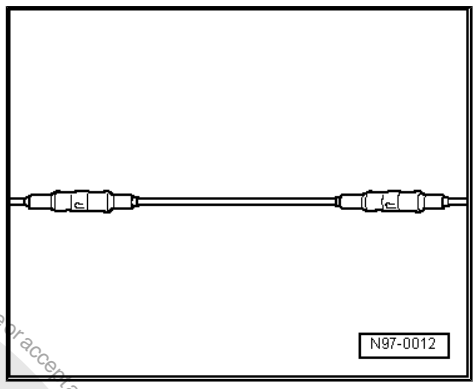

– Place the yellow repair wire next to the damaged wiring harness and cut the repair wire to the required length using the Wiring Harness Repair Set - Wire Strippers - VAS1978/3- .

– Cut damaged wire section from the vehicle-specific single wire.

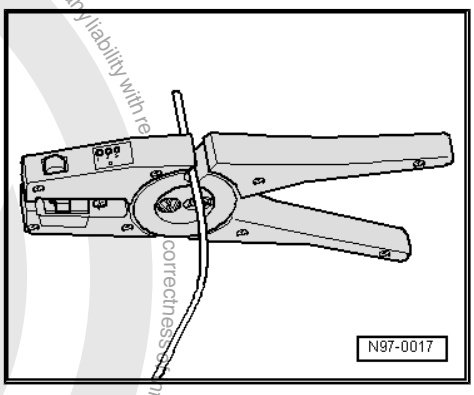

– Strip the wire ends 6 to 7 mm using the Wiring Harness Repair Set - Wire Strippers - VAS1978/3- .

– Slide crimp connection onto vehicle-specific single wire at one side and onto repair wire at the other side.

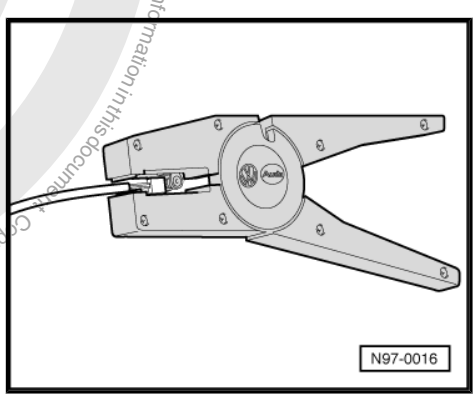

Protected by copyright. Copying for private or commercial purposes, in part or in whole, is not permitted unless authorised by Volkswagen AG. Volkswagen AG does not guarantee or accept any liability with respect to the correctness of information in this document. Copyright by Volkswagen AG.

– Crimp the crimp connector at both wire ends using the Crimping Pliers - .35-2.5mm - VAS1978/1A- .

– Repeat this procedure at the other repair wire end.

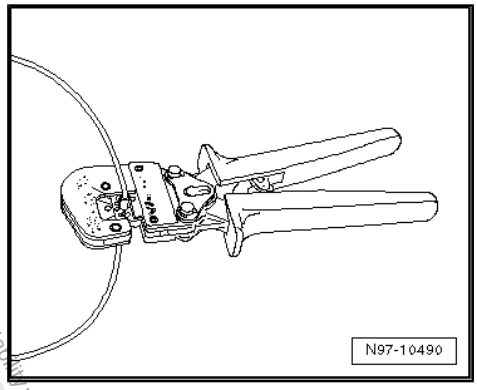

Note

- *Always be sure to use the correct crimping slot for the crimping connection used.*
- *Do not crimp wire insulation.*

After crimping, the crimp connectors must be heat-shrunk using the Wiring Harness Repair Set - Hot Air Blower - VAS1978/14A- to prevent moisture penetration.

– Place the Wiring Harness Repair - Blower - Shrink Element - VAS1978/15A- on the Wiring Harness Repair Set - Hot Air Blower - VAS1978/14A- .

– Heat the crimp connector using the Wiring Harness Repair Set - Hot Air Blower - VAS1978/14A- lengthwise from the center outward until it is sealed completely and the adhesive comes out at the ends.

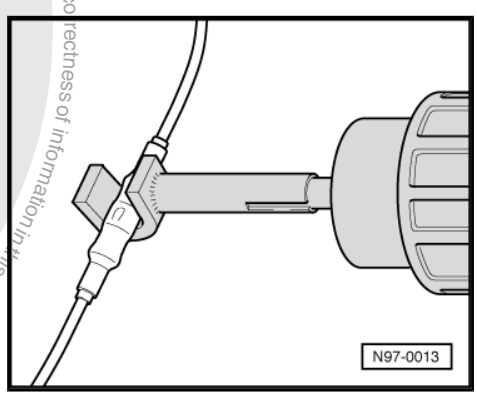

Caution

When heat-shrinking crimp connections, be careful not to damage any other wiring, plastic parts or insulating material with the hot nozzle of the Wiring Harness Repair Set - Hot Air Blower - VAS1978/14A- .

Always follow the Wiring Harness Repair Set - Hot Air Blower - VAS1978/14A- Operating Instructions!

Note

- *Make sure that crimp connections do not lie directly next to each other when several wires need to be repaired. Arrange the crimp connectors at a slight offset so that the circumference of the wiring harness does not become too large.*
- *In the event the repair point was previous taped, this point must be taped anew with yellow insulating tape after repairs.*
- *Secure the repaired wiring harness with a cable tie to prevent flapping noises while driving.*

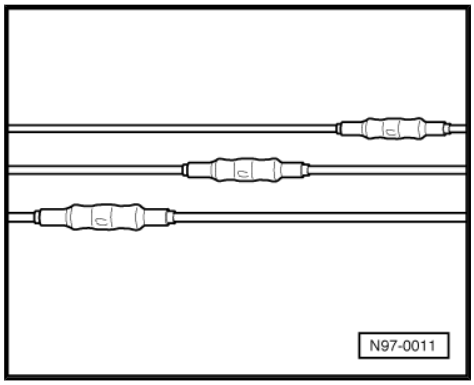

Protected by copyright. Copyright by Volkswagen AG. Volkswagen AG does not guarantee or accept any liability with respect to the correctness of information in this document. Copyright by Volkswagen AG. Reproduction, distribution and communication to third parties without our express permission is prohibited. Unauthorised use prohibited. Permitted for private, non-commercial purposes, in part or in whole, subject to proper acknowledgment.

3 Connector Housings, Releasing and Disassembling

⇒ “3.1 Connector Housings, Releasing and Disassembling”, page 107

⇒ “3.2 Connector Housings and Connectors, Repairing”, page 112

3.1 Connector Housings, Releasing and Disassembling

⇒ “3.1.1 Information on Releasing and Disassembling Connector Housings”, page 107

⇒ “3.1.2 Secondary Lock”, page 107

⇒ “3.1.3 Primary Lock”, page 108

⇒ “3.1.4 Round Connector Systems”, page 109

⇒ “3.1.5 Flat Connector Systems”, page 109

⇒ “3.1.6 Special Connector Systems”, page 111

3.1.1 Information on Releasing and Disassembling Connector Housings

- Observe general notes for repairs on the vehicle electrical system.
- Always use the release tools intended for the releasing process. Under no circumstances may terminals be pulled forcefully out of connector housings.
- Damaged connector housings must be replaced. New connector housings may be ordered via the replacement parts distributor.
- Small screwdrivers may be used as an aid to release the secondary locks.
- The chamber/connector assignment is partially stamped on the secondary lock or the rear side of the connector housing.
- Detailed information on component locations of harness connectors. Refer to ⇒ Wiring diagrams, Troubleshooting & Component locations.

The allocation of the correct release tools to the respective locking mechanisms can be found in the table in the Release Tool Set - VAS1978/35- Operating Instructions.

3.1.2 Secondary Lock

The secondary lock is a housing securing mechanism (second locking mechanism) that secures all wires in one connector housing. If a secondary lock is installed at a connector housing, it must always be opened or removed using specified tool before releasing and pulling out individual crimp contacts.

Secondary lock is distinguished by a different color from the rest of the connector housing. It simplifies recognizing the secondary lock and clarifies its function.

Protected by copyright. Copyright by Volkswagen AG. Volkswagen AG does not guarantee or accept any liability with respect to the correctness of information in this document. Copyright by Volkswagen AG.

The shapes of the connector housings depicted here are only a selection which, as an example, should make clear the various functions of the secondary lock.

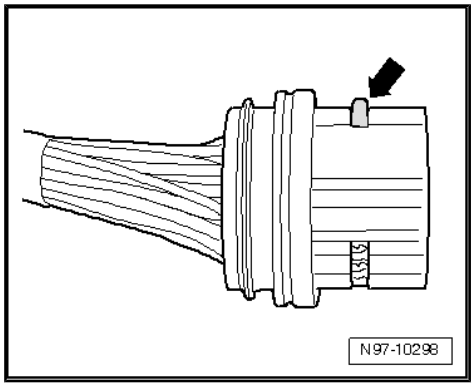

Example 1

Housing securing mechanism is released by removing a “comb” -arrow-.

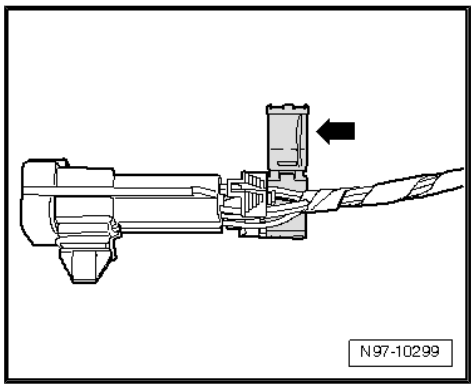

Example 2

Housing securing mechanism is released by opening a “flap” -arrow-.

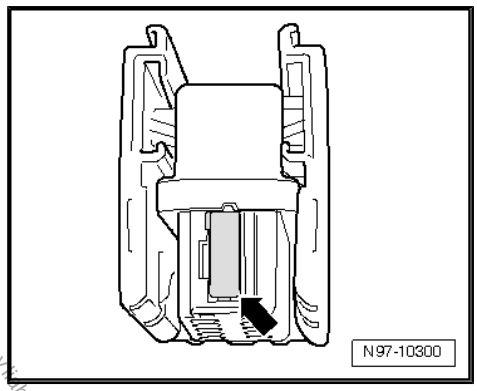

Example 3

Housing securing mechanism can be released by disengaging a “slider” -arrow-.

3.1.3 Primary Lock

The primary lock is the locking mechanism of an individual crimp contact in the connector housing.

If necessary, housing securing mechanisms (secondary locks) must be released or removed using specified tool before releasing the contacts. Refer to ⇒ “3.1.2 Secondary Lock”, page 107 .

The shapes of the primary locks depicted in the following are only a selection which, as an example, should make clear the various functions of the primary lock.

- Round connector systems. Refer to ⇒ “3.1.4 Round Connector Systems”, page 109 .
- Flat connector systems. Refer to ⇒ “3.1.5 Flat Connector Systems”, page 109 .
- Special connector systems. Refer to ⇒ “3.1.6 Special Connector Systems”, page 111 .

The allocation of the correct release tools for the respective locks can be found in the table in the Release Tool Set - VAS1978/35- Operating Instructions.

Protected by copyright. Copying or distribution is not permitted unless authorised by Volkswagen AG. Volkswagen AG does not guarantee or accept any liability with respect to the correctness of information in this document. Copyright by Volkswagen AG.

3.1.4 Round Connector Systems

Equipped housing securing mechanisms (secondary locks) must be released or removed using specified tool before releasing the contacts. Refer to ⇒ “3.1.2 Secondary Lock”, page 107 .

– Guide the release tool which fits the connector housing into release channel on the connector housing.

– Grasp the contact at the wire and gently push it into the connector housing -arrow-.

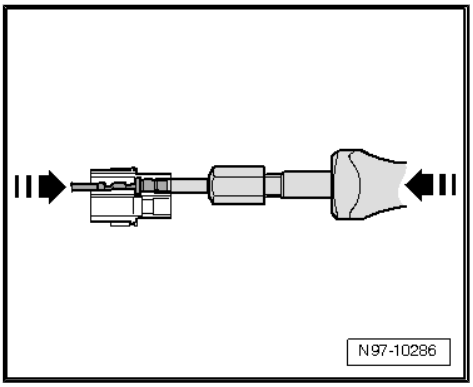

Note

By pushing the contact in the direction of the connector housing, contact retaining tabs are lifted off the housing shoulder and can be released using the release tool.

– At the same time, push the release tool in the direction of the connector housing and pull the released contact out of the connector housing.

After removing the contact, release tool can be pulled out of the connector housing again.

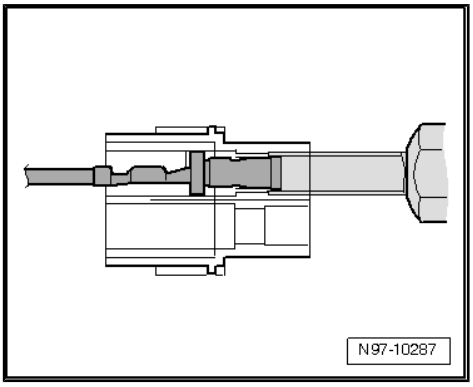

3.1.5 Flat Connector Systems

Equipped housing securing mechanisms (secondary locks) must be released or removed using specified tool before releasing the contacts. Refer to ⇒ “3.1.2 Secondary Lock”, page 107 .

Flat Connector System with One Retaining Tab

– Guide the release tool which fits the connector housing into release channel on the connector housing.

– Grasp the contact at the wire and gently push it into the connector housing -arrow-.

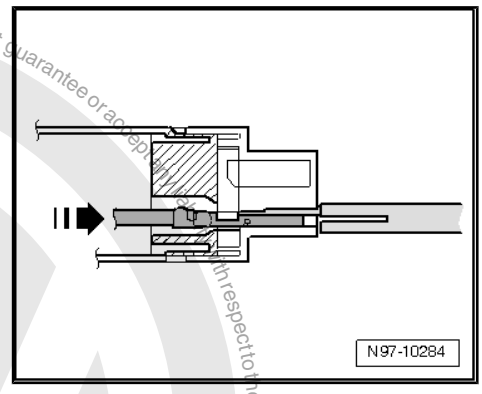

Note

By pushing the contact in the direction of the connector housing, the contact retaining tab is lifted off the housing shoulder and can be released using the release tool.

Protected by copyright. Copying for private or commercial purposes, in part or in whole, is not permitted unless authorised by Volkswagen AG. Volkswagen AG does not guarantee or accept any liability with respect to the correctness of information in this document. Copyright by Volkswagen AG.

– At the same time, push the release tool in the direction of the connector housing and pull the released contact out of the connector housing -arrow-.

After removing the contact, release tool can be pulled out of the connector housing again.

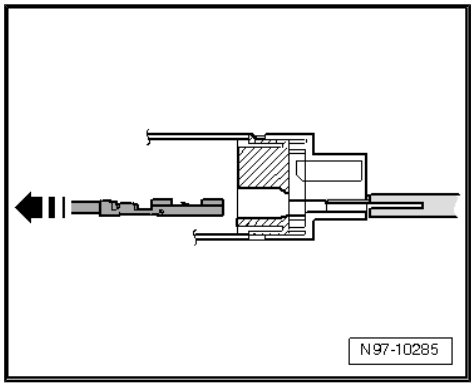

Flat Connector System with Two Retaining Tabs

– Guide the release tool which fits the connector housing into release channel on the connector housing.

– Grasp the contact at the wire and gently push it into the connector housing-arrow-.

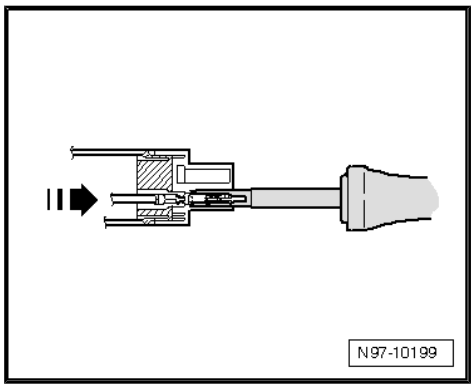

Note

By pushing the contact in the direction of the connector housing, contact retaining tabs are lifted off the housing shoulder and can be released using the release tool.

– At the same time, push the release tool in the direction of the connector housing and pull the released contact out of the connector housing -arrow-.

After removing the contact, release tool can be pulled out of the connector housing again.

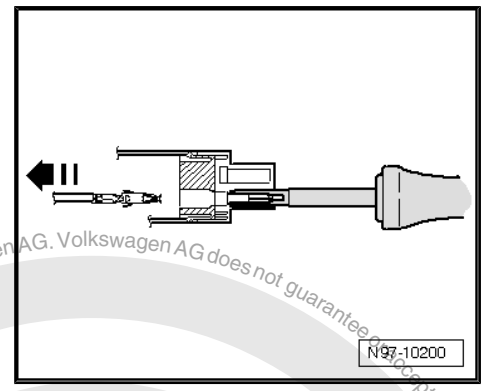

Asymmetrical

– Guide the release tool which fits the connector housing into release channel on the connector housing.

– Grasp the contact at the wire and gently push it into the connector housing -arrow-.

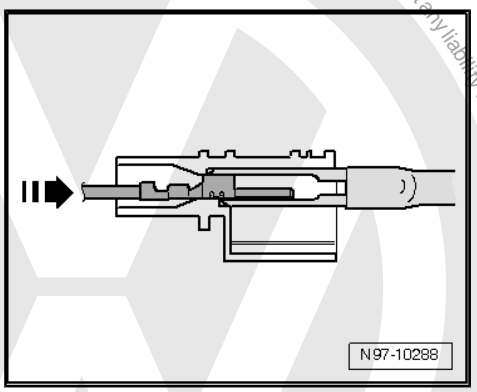

Note

By pushing the contact in the direction of the connector housing, contact retaining tabs are lifted off the housing shoulder and can be released using the release tool.

Protected by copyright. Copying for private or commercial purposes, in part or in whole, is not permitted unless authorised by Volkswagen AG. Volkswagen AG does not guarantee or accept any liability with respect to the correctness of information in this document. Copyright by Volkswagen AG.

– At the same time, push the release tool in the direction of the connector housing and pull the released contact out of the connector housing -arrow-.

After removing the contact, release tool can be pulled out of the connector housing again.

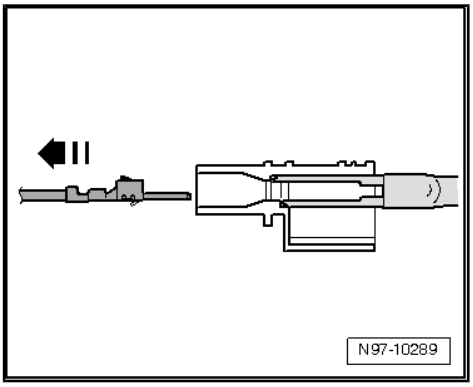

3.1.6 Special Connector Systems

Equipped housing securing mechanisms (secondary locks) must be released or removed using specified tool before releasing the contacts. Refer to ⇒ "3.1.2 Secondary Lock", page 107 .

Fasten Contacts

– Guide the release tool which fits the connector housing into the release channel on the connector housing -arrow-.

– Grasp the contact at the wire and gently push it into the connector housing.

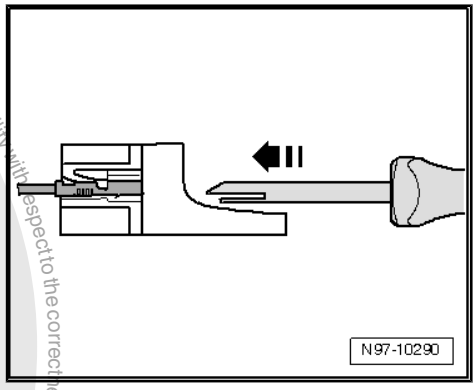

Note

By pushing the contact in the direction of the connector housing, contact retaining tabs are lifted off the housing shoulder and can be released using the release tool.

– At the same time, push the release tool in the direction of the connector housing and pull the released contact out of the connector housing -arrow-.

After removing the contact, release tool can be pulled out of the connector housing again.

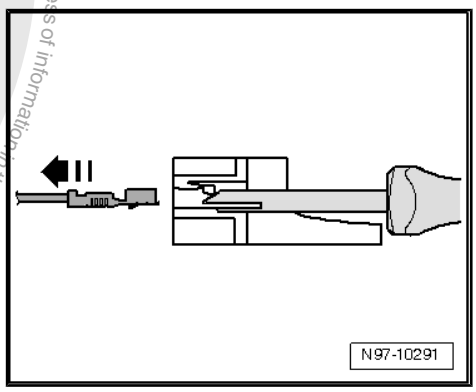

GT 150/280 Contacts

– Guide the release tool which fits the connector housing under the retaining tab into connector housing.

– Insert the tool all the way -arrow- into the connector housing.

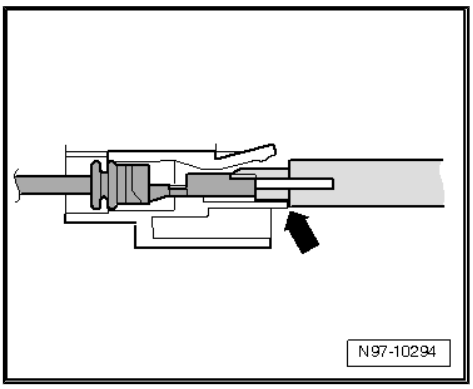

Protected by copyright. Copying for private or commercial purposes, in part or in whole, is not permitted unless authorised by Volkswagen AG. Volkswagen AG does not guarantee or accept any liability with respect to the correctness of information in this document. Copyright by Volkswagen AG.

Contact is ejected from the connector housing.

After ejecting the contact, release tool can be pulled out of the connector housing again.

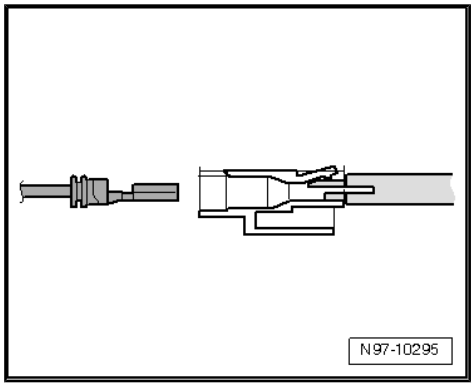

Contacts without Retaining Tabs

– Insert release tool under retaining tab of the connector housing.

– Push release tool through until it stops by gently lifting -arrow-.

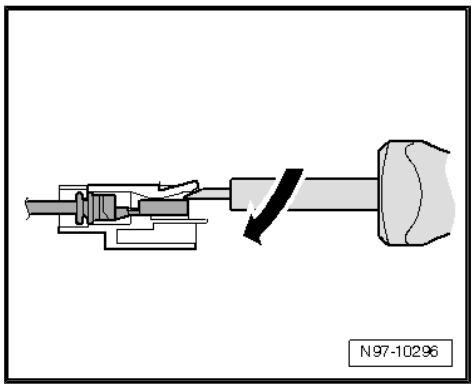

Contact is ejected from the connector housing.

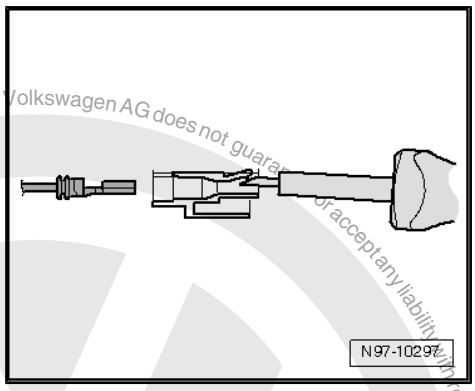

3.2 Connector Housings and Connectors, Repairing

⇒ "3.2.1 Connector Housings and Connectors, Repair Information", page 112

⇒ "3.2.2 Contacts in Connector Housing, Repairing", page 113

⇒ "3.2.3 Single Wire Seals, Installing", page 114

⇒ "3.2.4 Connector Housing with Insulation Displacement Connections, Repairing", page 116

3.2.1 Connector Housings and Connectors, Repair Information

- Observe general notes for repairs on the vehicle electrical system.
- Allocation of crimp contacts with correct fit to connector housing is performed according to the part number stamped in on the connector housing. Part numbers of connector housing are listed in conjunction with the respective crimp contacts with correct fit in plate 198 (electrical connecting elements) in the Parts Catalog.

Protected by copyright. Copying for private or commercial purposes, in part or in whole, is not permitted unless authorised by Volkswagen AG. Volkswagen AG does not guarantee or accept any liability with respect to the correctness of information in this document. Copyright by Volkswagen AG.

- Damaged connector housings must be replaced.
- New connector housings may be ordered via the replacement parts distributor.

3.2.2 Contacts in Connector Housing, Repairing

Procedure

– First open or release the secondary lock of the connector housing.

– Release the contact (primary lock) using the appropriate release tool.

– Pull contact at single wire out of the connector housing.

– Take the yellow repair wire with the correct contact out of the Wiring Harness Repair Set - VAS1978- / Wiring Harness Repair Set - VAS1978A- / Wiring Harness Repair Set - VAS1978B- .

– Free up repair point of vehicle-specific wiring harness (approximately 20 cm to both sides of repair point).

– Remove wiring harness wrapping using a folding knife.

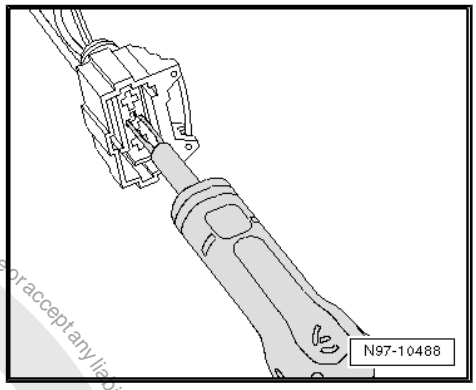

– Insert new contact of repair wire into connector housing until it engages.

– Slide a single wire seal onto the repair wire.

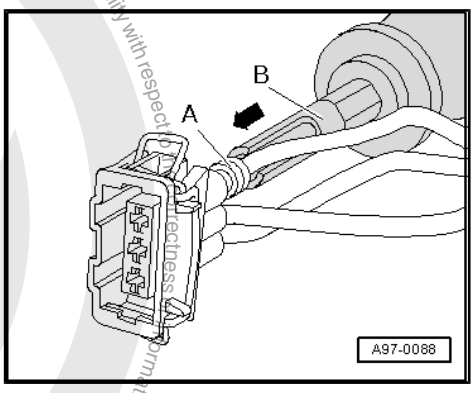

Note

When doing this, the small diameter of the single seal must point toward the connector housing.

– Slide the single wire seal into the connector housing using the correct assembly tool. Refer to ⇒ “3.2.3 Single Wire Seals, Installing”, page 114 .

– Shorten the repair wire and the vehicle-specific wiring harness single wire using the Wiring Harness Repair Set - Wire Strippers - VAS1978/3- .

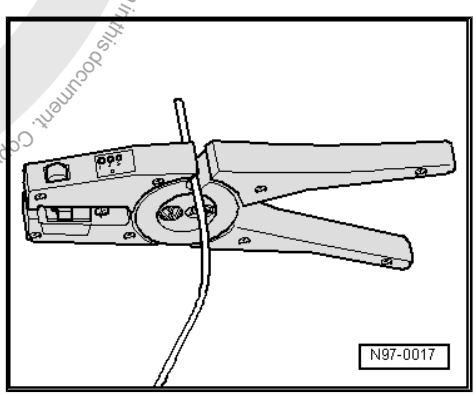

Protected by copyright. Copying for private or commercial purposes, in part or in whole, is not permitted unless authorised by Volkswagen AG. Volkswagen AG does not guarantee or accept any liability with respect to the correctness of information in this document. Copyright by Volkswagen AG.

– Strip the ends of the repair wire and the vehicle-specific single wire 6 to 7 mm using the Wiring Harness Repair Set - Wire Strippers - VAS1978/3- .

– Crimp the stripped ends of the repair wire and single wire of vehicle-specific wiring harness using the Crimping Pliers - . 35-2.5mm - VAS1978/1A- and a crimp connector as described in chapter “Open circuit with single repair point”.

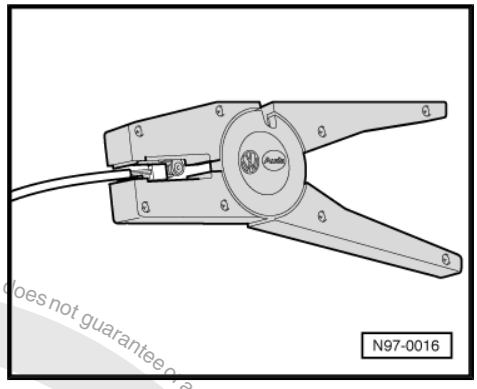

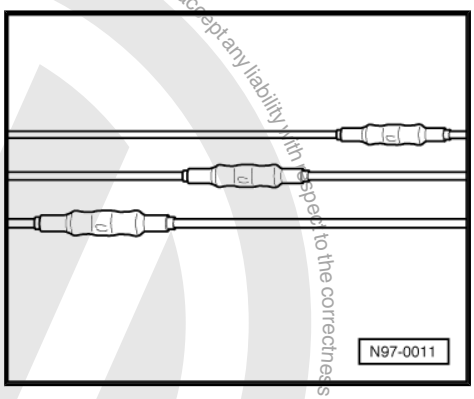

Note

- *Make sure that crimp connections do not lie directly next to each other when several wires need to be repaired. Arrange the crimp connectors at a slight offset so that the circumference of the wiring harness does not become too large.*
- *In the event the repair point was previous taped, this point must be taped anew with yellow insulating tape after repairs.*
- *Secure the repaired wiring harness with a cable tie to prevent flapping noises while driving.*

3.2.3 Single Wire Seals, Installing

Note

- *Single wire seals prevent the penetration of water and dirt into the connector housing. They are installed in the engine compartment and must be reinstalled after a repair.*
- *Single wire seal is crimped on at the factory together with contact on the wire, this is not the case for repair wires. Single wire seal must be slid onto wire first before crimping the repair wire.*
- *Single wire seals must always fit with the repair wire cross-section. Outer circumference of single wire seal is aligned according to chamber circumference of the connector housing. Perform assembly using only the assembly tool with correct fit.*

Assembling Single Wire Seal

– Release the contact lock using the appropriate release tool -A- and then pull wire with single wire seal toward the rear -arrow- out of the connector housing.

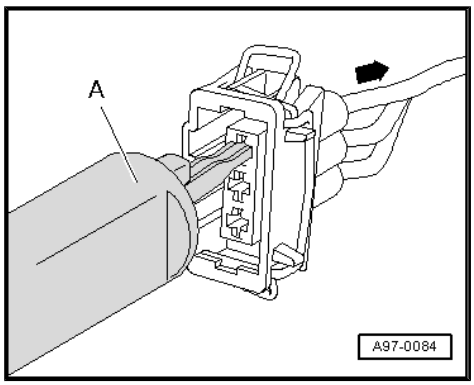

Protected by copyright. Copying for private or commercial purposes, in part or in whole, is not permitted unless authorised by Volkswagen AG. Volkswagen AG does not guarantee or accept any liability with respect to the correctness of information in this document. Copyright by Volkswagen AG.

– Cut off the old contact with single wire seal from the vehicle-specific wiring harness.

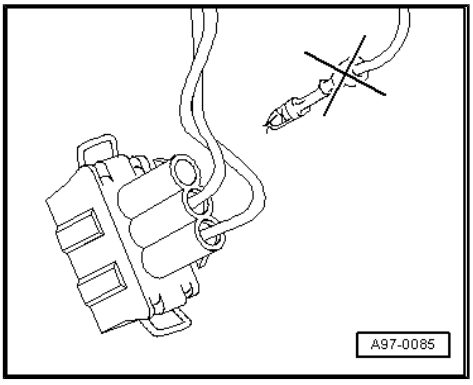

– Slide repair wire with the new contact into the corresponding chamber of connector housing until it engages -arrow-.

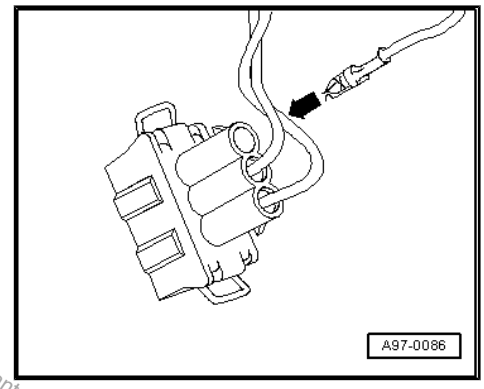

– Put single wire seal -A- onto the free end of the repair wire.

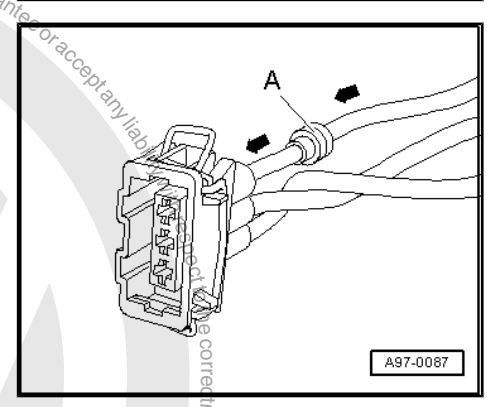

Note

When doing this, the small diameter of the single wire seal must point toward the connector housing.

– Slide single wire seal -A- on the repair wire up to the connector housing -arrows-.

– Slide single wire seal -A- all the way into the connector housing using the corresponding assembly tool -B-.

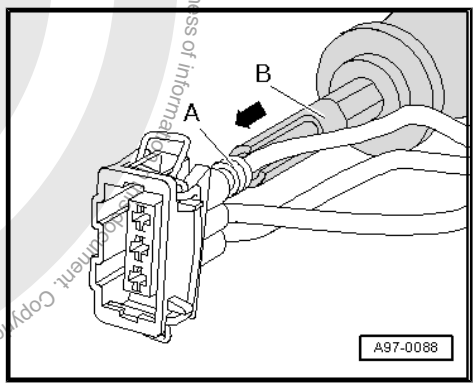

Protected by copyright. Copying for private or commercial purposes, in part or in whole, is not permitted unless authorised by Volkswagen AG. Volkswagen AG does not guarantee or accept any liability with respect to the correctness of information in this document. Copyright by Volkswagen AG.

– Shorten the repair wire and the vehicle-specific wiring harness single wire as needed using the Wiring Harness Repair Set - Wire Strippers - VAS1978/3- .
– Crimp the stripped ends of the repair wire and single wire of vehicle-specific wiring harness using the Crimping Pliers - . 35-2.5mm - VAS1978/1A- and a crimp connector as described in chapter “Open circuit with single repair point”.

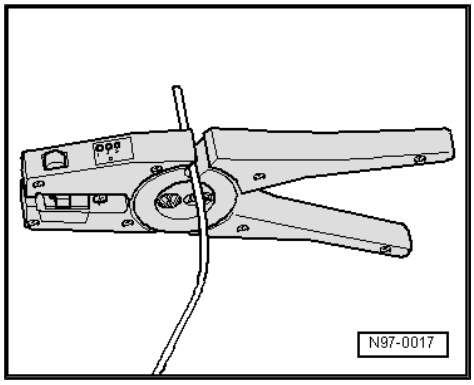

3.2.4 Connector Housing with Insulation Displacement Connections, Repairing

Note

- *For technical reasons, the connector housing for the wire terminals can be supplied only with the contacts pushed in.*
- *These contacts can be removed at every other connector housing in the event they are not required.*
- *Repair wires which have already been equipped with corresponding contacts crimped on are available. Refer to the Parts Catalog.*

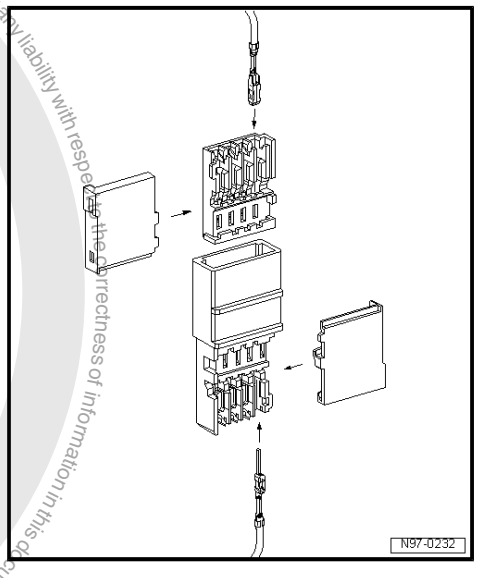

Protected by copyright. Copying for private or commercial purposes, in part or in whole, is not permitted unless authorised by Volkswagen AG. Volkswagen AG does not guarantee or accept any liability with respect to the correctness of information in this document. Copyright by Volkswagen AG.

4 Contact Surfaces, Cleaning

⇒ “4.1 Contact Surface Cleaning Set VAS6410 ”, page 117

4.1 Contact Surface Cleaning Set - VAS6410-

⇒ “4.1.1 Using Contact Surface Cleaning Set VAS6410 ”, page 117

⇒ “4.1.2 Wiring Eyelets, Repairing”, page 117

⇒ “4.1.3 Threaded Connections, Repairing”, page 119

⇒ “4.1.4 Battery Clamps and Battery Terminals, Cleaning”, page 120

⇒ “4.1.5 Protecting”, page 121

4.1.1 Using Contact Surface Cleaning Set - VAS6410-

The Contact Surface Cleaning Set - VAS6410- makes optimal repair quality possible in the realm of vehicle electronics. Using the tools, service work can be performed in the area of the contact sensor on the threaded connection wiring harnesses in the high current circuit (starter and charging current). The Contact Surface Cleaning Set - VAS6410- is adapted to the vehicle structural measurements and ensures correct servicing and a comfortable procedure.

Note

The illustrations of the service work only serve as examples.

Contact Surface Cleaning Set - VAS6410-

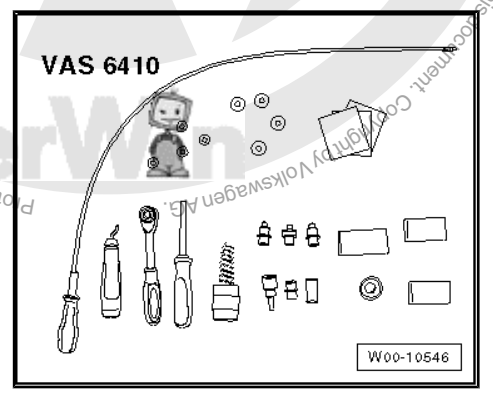

4.1.2 Wiring Eyelets, Repairing

Special tools and workshop equipment required

- Torque Wrench 1331 5-50Nm - VAG1331-

Note

- *Do not use rust remover, contact spray or grease because the lack of friction will cause the torque to be exceeded when installing and this will lead to the threaded connection breaking.*
- *The gray sanding pads are for slight contamination and suitable for "soft surfaces". The red sanding pads are for heavy contamination and suitable for "hard surfaces".*

Protected by copyright. Copying for private or commercial purposes, in part or in whole, is not permitted unless authorised by Volkswagen AG. Volkswagen AG does not guarantee or accept any liability with respect to the correctness of information in this document. Copyright by Volkswagen AG.

Protected by copyright. Copyright by Volkswagen AG. Volkswagen AG does not guarantee or accept any liability with respect to the correctness of information in this document. Copyright by Volkswagen AG. Protected by copyright. Copying for private or commercial purposes, in whole or in part, is not permitted unless authorized by Volkswagen AG.

WARNING

Risk of injury. Follow all warning messages and safety precautions. Refer to ⇒ "1.3 Warnings and Safety Precautions", page 3 .

Procedure

- Disconnect the Battery - A- . Refer to ⇒ Electrical Equipment; Rep. Gr. 27 ; Battery; Battery, Disconnecting and Connecting .
- Loosen the cap nut and remove the wiring eyelet from the threaded connection.
- Check the wiring eyelet for corrosion and dirt.
- Select the corresponding adapter and the corresponding sanding pad.

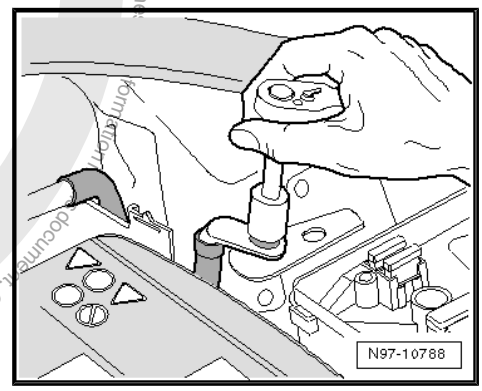

Note

The sanding block can be used instead.

Caution

Make sure the tin layer is not worn down too much and the copper is not visible. A galvanic element can form from this, destroying the metal and causing incorrect repairs.

Note

Due to the different thicknesses of the tin layer, the cleaning process must be performed in several steps and a visual inspection of the wiring eyelet between steps is necessary.

- Insert the adapter in the wiring eyelet and sand off the corrosion and contamination with circular motions.
- Check the wiring eyelet and sand it again.

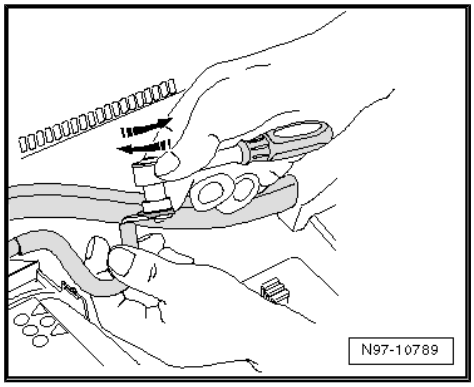

– Remove the burr on the wiring eyelet with the deburrer.

– Install the wiring eyelet to the specified tightening specification. Refer to ⇒ Electrical Equipment; Rep. Gr. 97 ; Component Location Overview - Relay Carriers, Fuse Panels and E-Boxes or ⇒ Electrical Equipment; Rep. Gr. 27 ; Overview - Battery .

– Protect the connection with the corresponding protection material. Refer to ⇒ "4.1.5 Protecting", page 121 .

– Connect the Battery - A- . Refer to ⇒ Electrical Equipment; Rep. Gr. 27 ; Battery; Battery, Disconnecting and Connecting .

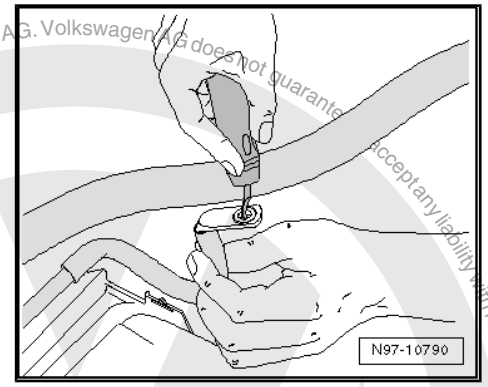

WARNING

Risk of injury. Follow all warning messages and safety precautions. Refer to ⇒ "1.3 Warnings and Safety Precautions", page 3 .

4.1.3 Threaded Connections, Repairing

Special tools and workshop equipment required

- Torque Wrench 1331 5-50Nm - VAG1331-

Note

- *Do not use rust remover, contact spray or grease because the lack of friction will cause the torque to be exceeded when installing and this will lead to the threaded connection breaking.*
- *The gray sanding pads are for slight contamination and suitable for "soft surfaces". The red sanding pads are for heavy contamination and suitable for "hard surfaces".*

WARNING

Risk of injury. Follow all warning messages and safety precautions. Refer to ⇒ "1.3 Warnings and Safety Precautions", page 3 .

Procedure

– Disconnect the Battery - A- . Refer to ⇒ Electrical Equipment; Rep. Gr. 27 ; Battery; Battery, Disconnecting and Connecting .

Protected by copyright. Copying for private or commercial purposes, in part or in whole, is not permitted unless authorised by Volkswagen AG. Volkswagen AG does not guarantee or accept any liability with respect to the correctness of information in this document. Copyright by Volkswagen AG.

– Loosen the cap nut and remove the wiring eyelet from the threaded connection.
– Check the threaded connection for corrosion and dirt.
– Select the corresponding adapter and the corresponding sanding pad for the threaded connection.

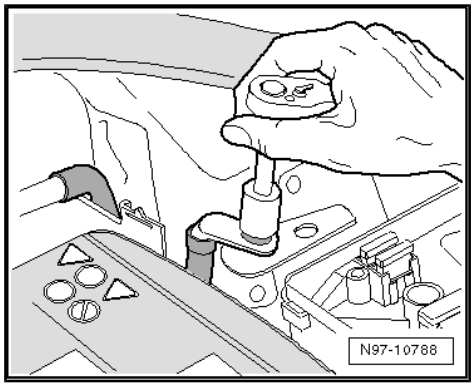

Caution

Make sure the tin layer is not worn down too much and the copper is not visible. A galvanic element can form from this, destroying the metal and causing incorrect repairs.

Note

Due to the different thicknesses of the tin layer, the cleaning process must be performed in several steps and a visual inspection of the wiring eyelet between steps is necessary.

– Insert the adapter in the threaded connection and sand off the corrosion and contamination with circular motions.
– Check the threaded connection and sand it again.
– Fasten the connection and the anti-twist mechanism to the specified tightening specification. Refer to ⇒ Electrical Equipment; Rep. Gr. 97 ; Component Location Overview - Relay Carriers, Fuse Panels and E-Boxes or ⇒ Electrical Equipment; Rep. Gr. 27 ; Overview - Battery .
– Protect the threaded connection with the corresponding protection material. Refer to ⇒ “4.1.5 Protecting”, page 121 .
– Connect the Battery - A- . Refer to ⇒ Electrical Equipment; Rep. Gr. 27 ; Battery; Battery, Disconnecting and Connecting .

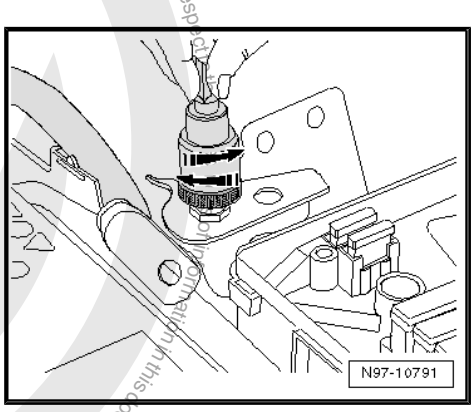

WARNING

Risk of injury. Follow all warning messages and safety precautions. Refer to ⇒ “1.3 Warnings and Safety Precautions”, page 3 .

4.1.4 Battery Clamps and Battery Terminals, Cleaning

Special tools and workshop equipment required

♦ Torque Wrench 1331 5-50Nm - VAG1331-

Note

Do not use rust remover, contact spray or grease because the lack of friction will cause the torque to be exceeded when installing and this will lead to the threaded connection breaking.

Copyright by Volkswagen AG. Protected by copyright. Copying for private or commercial purposes, in part or in whole, is not permitted unless authorised by Volkswagen AG. Volkswagen AG does not guarantee or accept any liability with respect to the information in this document.

WARNING

Risk of injury. Follow all warning messages and safety precautions. Refer to ⇒ "1.3 Warnings and Safety Precautions", page 3 .

Procedure

– Disconnect the Battery - A- . Refer to ⇒ Electrical Equipment; Rep. Gr. 27 ; Battery; Battery, Disconnecting and Connecting .

– Check the battery terminal and battery pole for corrosion and dirt.

The battery terminal clamp is cleaned with the battery terminal cleaner wire brush using circular motions.

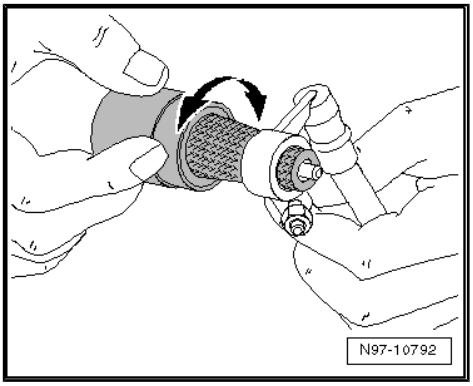

The battery terminal is cleaned with the bottom side of the terminal cleaner using circular motions.

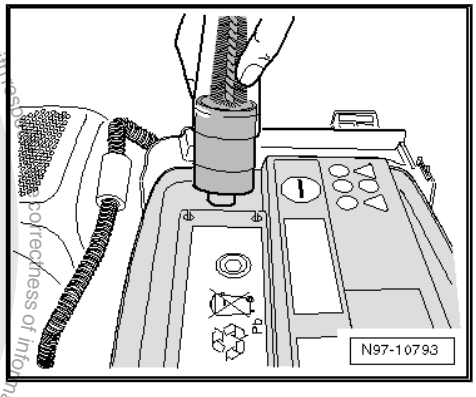

WARNING

Risk of injury. Follow all warning messages and safety precautions. Refer to ⇒ "1.3 Warnings and Safety Precautions", page 3 .

– Connect the Battery - A- . Refer to ⇒ Electrical Equipment; Rep. Gr. 27 ; Battery; Battery, Disconnecting and Connecting .

4.1.5 Protecting

Caution

Missing protection leads to the electrical system damage.

Note

- *All threaded connections must be tightened to the tightening specification.*
- *When applying protection, use the accompanying hose on the protection container.*
- *Protection wax is used in the cool area.*
- *Cavity protection wax is used in the warm area.*
- *The protection material draws itself into the affected places by capillary action.*

Protected by copyright. Copyright by Volkswagen AG. Copyright by Volkswagen AG. Volkswagen AG does not guarantee or accept any liability with respect to the correctness of information in this document. Copying for commercial purposes, in part or in whole, is not permitted unless authorised by Volkswagen AG.

Procedure

– Hold the injector under the wiring eyelet and spray all around the pins.

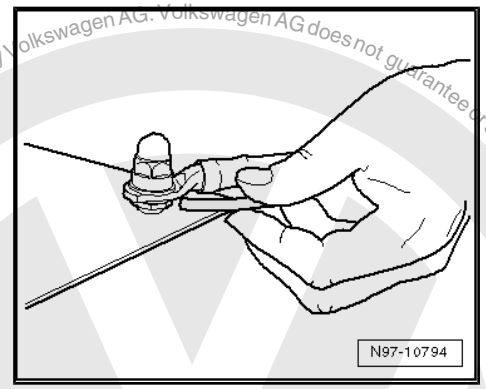

– Hold the injector above the wiring eyelet and spray all around the pins and wiring eyelet.

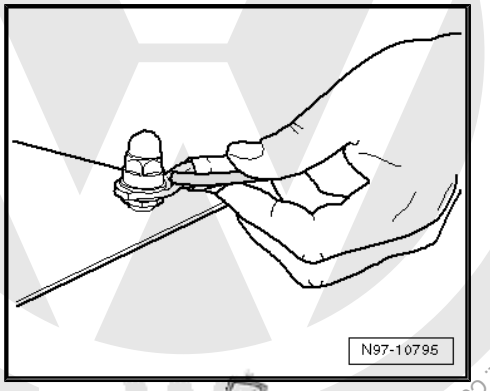

Protected by copyright. Copying for private or commercial purposes, in part or in whole, is not permitted unless authorised by Volkswagen AG. Volkswagen AG does not guarantee or accept any liability with respect to the correctness of information in this document. Copyright by Volkswagen AG.

5 Antenna Wires, Repairing

⇒ “5.1 General Information”, page 123

⇒ “5.2 Overview - Antenna Wiring”, page 123

⇒ “5.3 New Antenna Wire, Installing”, page 123

5.1 General Information

A new repair concept has been developed for repairing antenna wires. Instead of a complete antenna wire, connecting wires of different lengths and various adapter leads are now available as replacement parts.

General Information

- If a repair is necessary, antenna wires may not be repaired, but rather are to be replaced with genuine replacement parts, such as connecting wires and adapter leads.
- Replacement parts are found in the Parts Catalog.
- These genuine replacement parts are suitable for all antenna wires and wire cross sections, that require replacement.
- Connector housing for antenna wires can be obtained as a replacement part only in one color, but can be used for all antenna connector colors.
- The replacement of individual antenna connectors during repair work is not intended.
- The wires are appropriate for use on all VW vehicles with equipped antenna wiring cross-sections.
- All adapter leads and connecting wires are suitable for various transmission and reception signals.
- This repair concept can also be used for testing or as an aftermarket solution.

5.2 Overview - Antenna Wiring

Overview of Antenna Wiring

Example: antenna wire from the Radio - R- to the Antenna - R11- faulty. The following wires are required for repair:

1 - Adapter cable for connecting to the Radio - R- , length approximately 30 cm

2 - Connecting wire, available in various lengths.

3 - Adapter cable for connecting to the Antenna - R11- , length approximately 30 cm

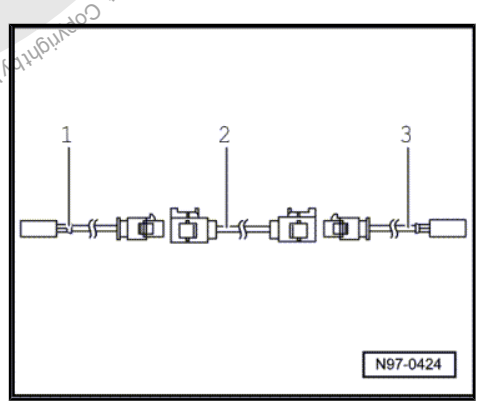

5.3 New Antenna Wire, Installing

Note that, depending on the vehicle equipment, the entire length of an antenna wire may be separated into partial lengths by the Antenna Selection Control Module - J515- , Traffic Monitoring Control Module - J559- or Antenna Amplifier - R24- . Only the defective sections need to be replaced.

Procedure

– Separate the connectors of the faulty antenna wiring from their components.

– Determine the path of the faulty antenna wire in the vehicle and measure the total length of antenna wire to be replaced.

Protected by copyright. Copying for private or commercial purposes, in part or in whole, is not permitted unless authorised by Volkswagen AG. Volkswagen AG does not guarantee or accept any liability with respect to the correctness of information in this document. Copyright by Volkswagen AG.

The entire length of the antenna wire consists of the length of the required adapter leads -1 and 3- as well as the connecting wire -2-.

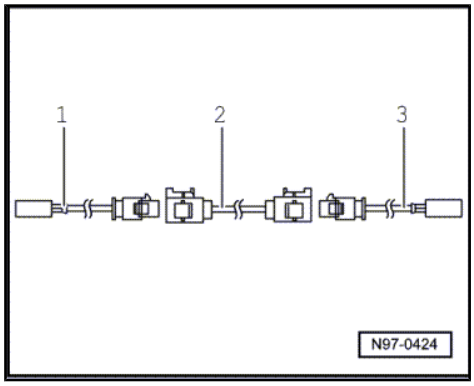

– Subtract 60 cm from the total length of antenna wire measured, to receive the length of connecting wire -2- required.
– Obtain the required adapter cables -1 and 3- as well as the calculated length of connecting line -2- as original replacement part according to the Parts Catalog.
– Cut the connectors off of the faulty antenna wiring.

Leave the rest of the defective antenna wire in the vehicle.

– Connect the adapter leads -1 and 3- to devices in the vehicle.
– Route and secure connecting wire -2- in the immediate vicinity of the series-installed wire routing.

Note

Antenna wires must not be kinked or excessively bent! The bending radius must not be less than 50 mm.

– Connect the connecting wire with the adapter leads.
– Perform a functionality test.

Protected by copyright. Copying for private or commercial purposes, in part or in whole, is not permitted unless authorised by Volkswagen AG. Volkswagen AG does not guarantee or accept any liability with respect to the correctness of information in this document. Copyright by Volkswagen AG.

6 Fiber-Optic Cable

⇒ "6.1 Fiber-Optic Cables, Repairing", page 125

⇒ "6.2 Fiber-Optic Cable, Assembling", page 125

⇒ "6.3 Fiber-Optic Cable, Disconnecting from Wiring Harness Connector", page 130

6.1 Fiber-Optic Cables, Repairing

It is very difficult to find the exact location of the problem. Replace the damaged fiber-optic cable and lay a new wire parallel to the defective fiber-optic cable.

Note

- *Select the damaged fiber-optic cable components with the "Guided Fault Finding" or "Guided Functions" from the Vehicle Diagnostic Tester menu options.*
- *A fiber-optic cable that needs repair is represented by a "yellow" color.*

Procedure:

– Choose "Guided Fault Finding" or "Guided Functions" in the Vehicle Diagnostic Tester .

– Assemble the fiber-optic cable. Refer to ⇒ "6.2 Fiber-Optic Cable, Assembling", page 125 .

Caution

Do not bend the fiber-optic cable too much. The bending radius must be no less than 25 mm.

Fiber optic cables must not be routed over sharp edges.

The fiber-optic cable must not be dirty or touched with bare fingers.

Fiber optic cables may not be heated.

It is not permitted to twist together 2 fiber optic cables or one fiber optic cable with a copper wire.

Protect the connector and the connection box from dust. Place the cap on the trunk.

6.2 Fiber-Optic Cable, Assembling

Special tools and workshop equipment required

- Fiber-Optic Conductor Repair Set - VAS6223A-
- Hose Cutting Pliers - VAS6228-
- Vehicle Diagnostic Tester

Protected by copyright. Copying for private or commercial purposes in part or in whole is not permitted unless authorised by Volkswagen AG. Volkswagen AG does not guarantee or accept any liability with respect to the correctness of information in this document. Copyright by Volkswagen AG.

Caution

Do not bend the fiber-optic cable too much. The bending radius must be no less than 25 mm.

Fiber optic cables must not be routed over sharp edges.

The fiber-optic cable must not be dirty or touched with bare fingers.

Fiber optic cables may not be heated.

It is not permitted to twist together 2 fiber optic cables or one fiber optic cable with a copper wire.

Protect the connector and the connection box from dust. Place the cap on the trunk.

Protected by copyright. Copying for private or commercial purposes, in part or in whole, is not permitted unless authorised by Volkswagen AG. Volkswagen AG does not guarantee or accept any liability with respect to the information in this document. Copyright by Volkswagen AG.

Mount the Tool Head for the Fiber-Optic Repair Set - Pliers - VAS6223/1- .

– Remove the locating pin in the direction of the -arrow-.

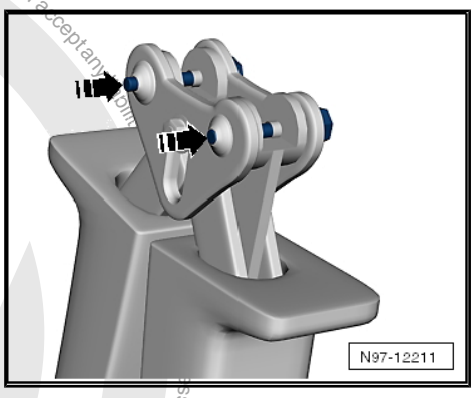

– Position the tool head in the direction of the -arrow-.

– Push the locking pin back.

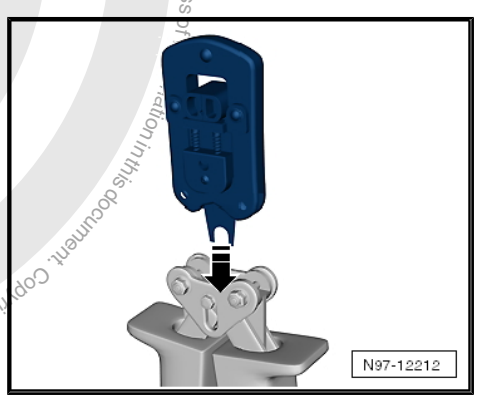

Fiber Optic Cable, Cutting to Length

– Open the Fiber-Optic Repair Set - Pliers and lay the fiber-optic cable -1- in direction of the -arrow- in the mount.

– Establish length of fiber optic cable required.

– Close the Fiber-Optic Repair Set - Pliers - VAS6223/1- to cut the fiber-optic cable to length.

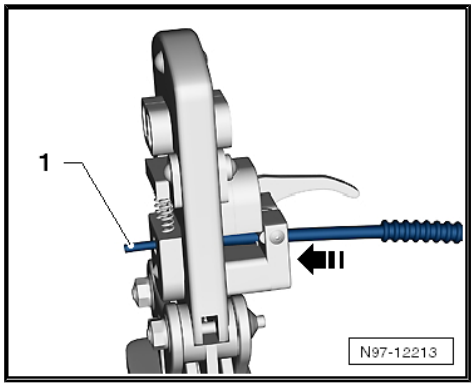

Stripping

– Open the Fiber-Optic Repair Set - Pliers - VAS6223/1- .
– Position the wire stripper lever in the lower position in direction of the -arrow-.
– Insert fiber-optic cable into the stripping station.
• The end of the fiber-optic cable must be flush with the rear side of the cutting pliers.

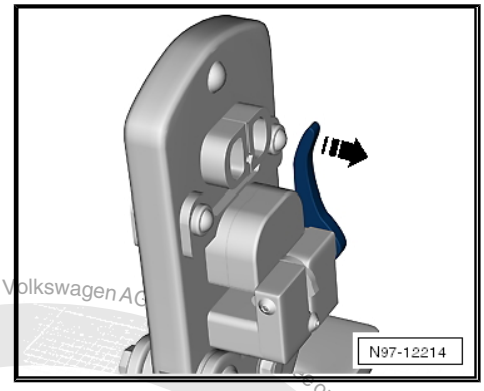

– Close the Fiber-Optic Repair Set - Pliers - VAS6223/1- until it stops and keep closed.
– Turn the wire stripper lever in the direction of the -arrow-.
– Remove the fiber-optic cable.

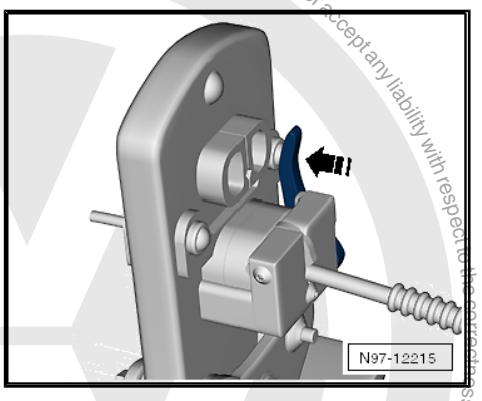

Precision Cutting (production of optical end face)

– Push the fiber-optic cable -1- into the cutting station.
• Insulation must make contact with cutting point stop.
– Close the Fiber-Optic Repair Set - Pliers - VAS6223/1- and remove the wire.

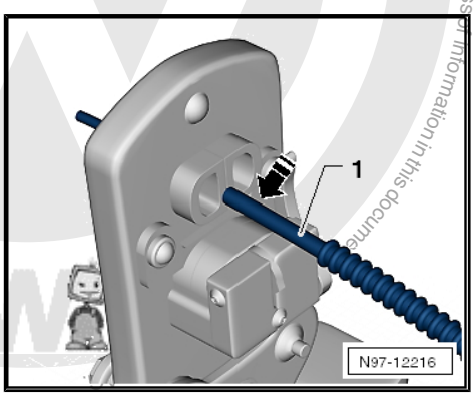

– Visually inspect the wire -1- to make sure that it was cut correctly and that there are no burrs on the front surface.

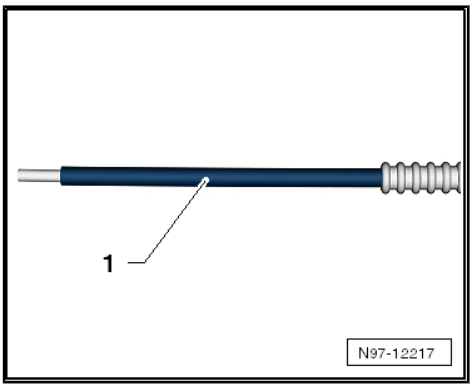

Note

♦ *Fiber-optic cable is only to be placed on an absolutely clean surface or held in hand.*
♦ *Use the cap if there is a risk of the fiber-optic cable surface becoming dirty.*

Attaching Brass Pin Contact to Fiber-Optic Cable.

Protected by copyright. Copying for private or commercial purposes, in part or in whole, is not permitted unless authorised by Volkswagen AG. Volkswagen AG does not guarantee or accept any liability with respect to the correctness of information in this document.

– Position the tool head in the direction of the -arrow-.

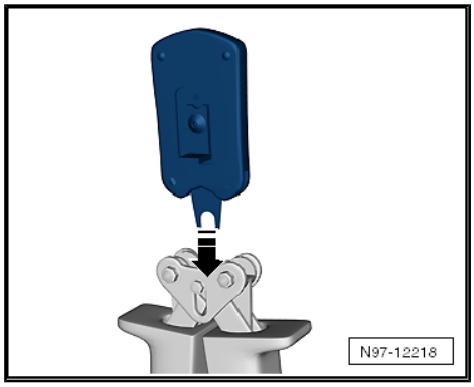

– Slide the safeguard on the Fiber-Optic Repair Set - Pliers - VAS6223/1- in direction of the -arrow- so that the word “Stift” (pin) is legible.

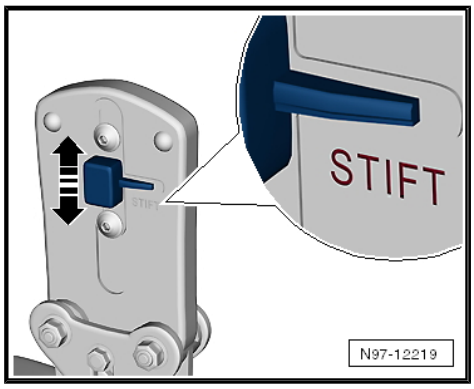

– Insert a brass pin contact -1- in the mount.
– Close the securing lever on the Fiber-Optic Repair Set - Pliers - VAS6223/1- in the direction of the -arrow-.

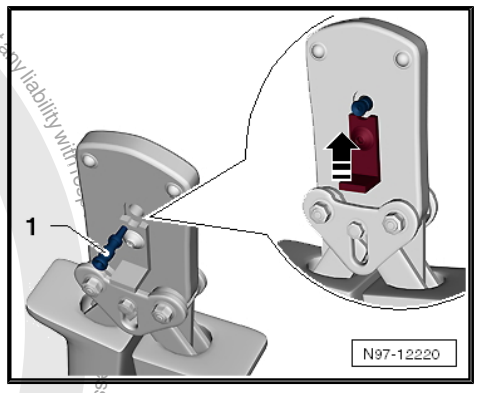

– Insert the fiber-optic cable into the brass pin contact -arrow- all the way up to the threaded stop and then close the Fiber-Optic Repair Set - Pliers - VAS6223/1- .
– Open the fiber-optic cable pliers and remove the fiber-optic cable along with the brass contact pin.

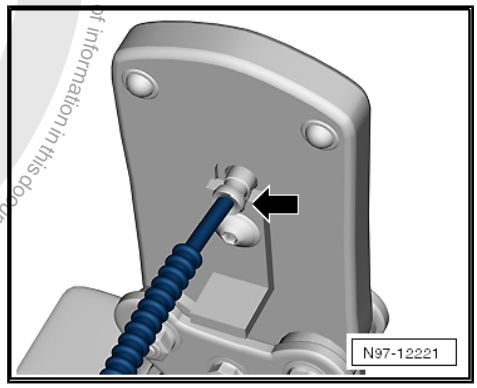

Caution

Do not excessively bend or kink the fiber-optic cables (minimum bending radius 25 mm).

Protected by copyright. Copying for private or commercial purposes, in part or in whole, is not permitted unless authorised by Volkswagen AG. Volkswagen AG does not guarantee or accept any liability with respect to the correctness of information in this document. Copyright by Volkswagen AG.

– Make sure the brass pin contact -2- is secured properly on the fiber-optic cable -1-.

- 4 crimped points must be visible on the brass connecting pin.
- The brass pin contact must not be able to be removed by hand from fiber-optic cable.
- The front surface of the fiber-optic cable is 0.01 to 0.1 mm behind the brass pin contact (visual check).

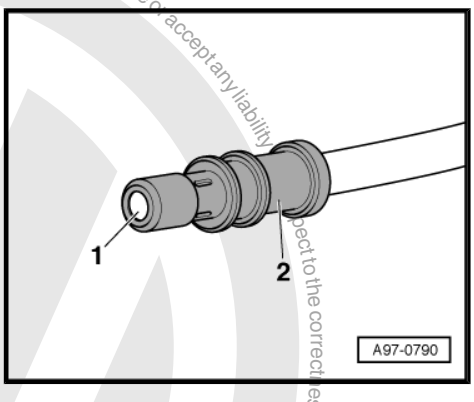

Note

◆ *Connector couplings are available for connecting the fiber-optic cables. Refer to Parts Catalog.*

◆ *To install the new fiber optic cable in wiring harness connector. Refer to*
⇒ "6.3 Fiber-Optic Cable, Disconnecting from Wiring Harness Connector", page 130 .

Corrugated Tube, Install on Fiber Optic Cable.

– Cut the corrugated tube to the fitting length using Hose Cutting Pliers - VAS6228- .

- The corrugated tube must be cut on the wave peak -arrow- not in the wave trough.
- Use the Hose Cutting Pliers - VAS6228- or a sharp knife for cutting.
- The corrugated tube must not be cut using a side cutter under any circumstances.
- The corrugated tube must audibly engage in the fiber-optic cable housing when installing.

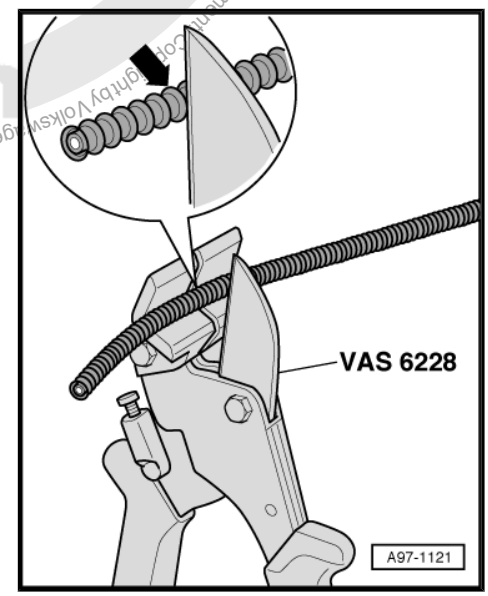

– Guide the fiber-optic cable into the Fiber-Optic Repair Set - Tube Tool - VAS6223/10- .

– Position corrugated tube assembly pliers on slot on the tube.

– Position crimping pliers for fiber-optic cable at slot of corrugated tube. The fiber optic cable is then routed in the corrugated tube.

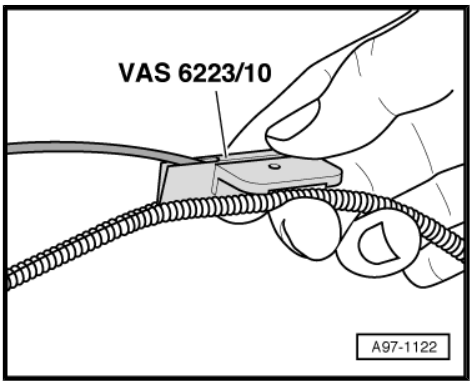

Protected by copyright. Copyright by Volkswagen AG.

6.3 Fiber-Optic Cable, Disconnecting from Wiring Harness Connector

Removing

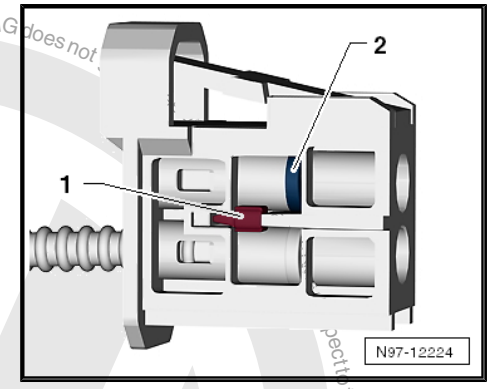

– Unplug connector for fiber optic cable from appropriate control unit.
– Release the locking mechanism in the fiber-optic cable connector -1- by pushing on it.
– Release the secondary lock -2- with a small screwdriver.
– Remove the fiber-optic cable.

Caution

- ***Install the cap on the trunk, in order to protect the fiber-optic cable from dust and dirt.***
- ***Use a new housing since it is likely that the secondary lock was damaged during the removal of the fiber-optic cable.***
- ***Note the arrows on the base module for allocation "IN" and "OUT".***

Installing

Install in the reverse order of removal. Note the following:

– Install the fiber-optic cable according to the markings.

Note

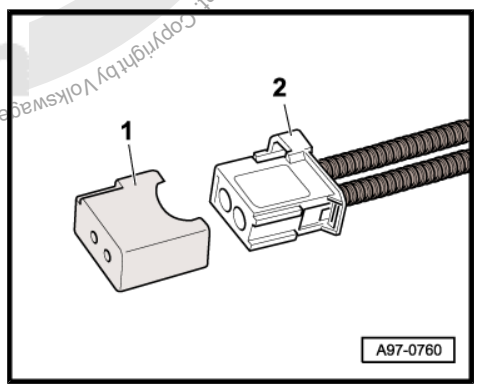

- *Push the corrugated tube into the connector housing until it audibly engages.*
- *Seal open fiber-optic cable connector -2- with Fiber-Optic Repair Set - Connector Protective Caps - VAS6223/9- -item 1-.*
- *The protective cap prevents contamination of or mechanical damage to front surface of fiber optic cable which would impair signal transmission.*

Protected by copyright. Copying for private or commercial purposes in part or in whole, is not permitted unless authorised by Volkswagen AG. Volkswagen AG does not ... pect to the correctness of information in this document. Copyright by Volkswagen AG.

Protected by copyright. Copying for private or commercial purposes, in part or in whole, is not permitted unless authorised by Volkswagen AG. Volkswagen AG does not guarantee or accept any liability with respect to the correctness of information in this document. Copyright by Volkswagen AG.

7 Heated Oxygen Sensor, Replacing

⇒ "7.1 Heated Oxygen Sensor, Replacing, 4-Pin Universal Oxygen Sensor", page 131

⇒ "7.2 Heated Oxygen Sensor, Replacing, 6-Pin Universal Oxygen Sensor", page 131

⇒ "7.3 Oxygen Sensor Unit Protective Pipes", page 132

7.1 Heated Oxygen Sensor, Replacing, 4-Pin Universal Oxygen Sensor

Use the faulty sensor as a guide for installing all of the accompanying attachments, cable ties or marking bands.

Do not repair the heated oxygen sensor wires. Repairing may result in malfunctions.

Procedure

– Remove the faulty heated oxygen sensor.

– Lay both of the heated oxygen sensors next to each other so the sensor housings are the same level.

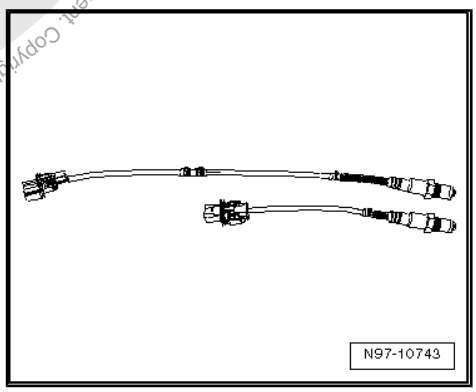

– Tie the excess length of the sensor (approximately 50 to 250 mm) back so it is the same length as the faulty sensor and secure it with cable ties -1-.

– Check if the heated oxygen sensor connector housing is compatible with the vehicle electrical system side.

– Replace the vehicle electrical system connector with the provided heated oxygen sensor connector housing. Refer to ⇒ "3.2 Connector Housings and Connectors, Repairing", page 112 .

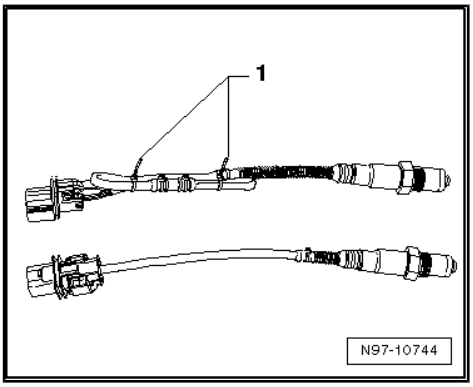

Note

- *Only replace the connector housing on older vehicles. The connector housing is correct on new vehicles.*
- *Check the pin assignment. The individual pins in the new connector housing are marked with colors.*
- *The packaging for the new heated oxygen sensor contains additional information.*

– Install the new heated oxygen sensor in the vehicle.

7.2 Heated Oxygen Sensor, Replacing, 6-Pin Universal Oxygen Sensor

Use the faulty sensor as a guide for installing all of the accompanying attachments, cable ties or marking bands.

Do not repair the heated oxygen sensor wires. Repairing may result in malfunctions.

Procedure

– Remove the old heated oxygen sensor.

– Lay both of the heated oxygen sensors next to each other so the sensor housings are the same level.

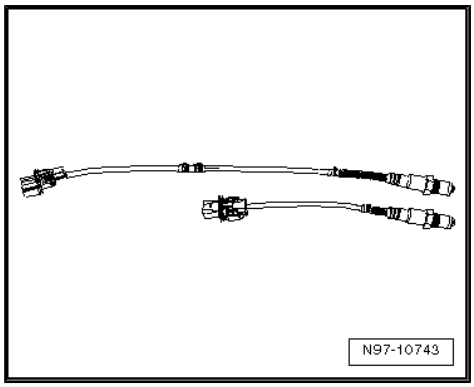

– Tie the excess length of the sensor (approximately 50 to 250 mm) back so it is the same length as the faulty sensor and secure it with cable ties -1-.

– Install the new heated oxygen sensor in the vehicle.

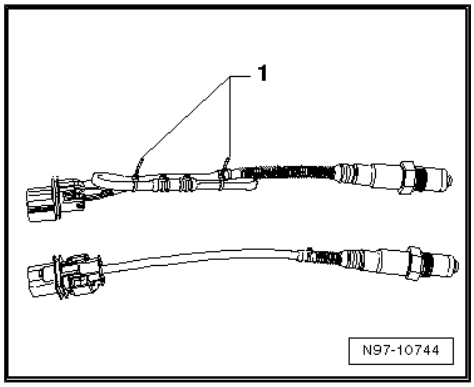

7.3 Oxygen Sensor Unit Protective Pipes

Note

In addition to using the part number, the protective pipe can also be used for identification.

Version D1: 6 Openings, 3.5 mm Each

Only used with the 4-pin oxygen sensor

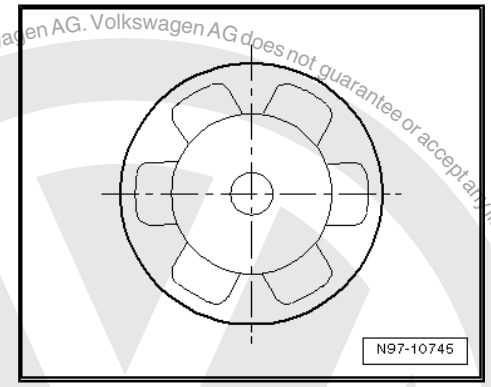

Version D2: 6 Openings, 2 mm Each

Used with 4-pin and 6-pin universal oxygen sensors.

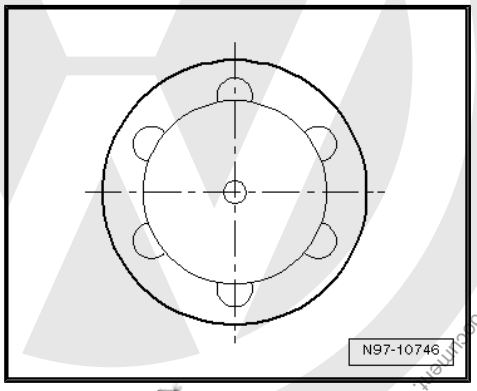

Protected by copyright. Copying for private or commercial purposes, in part or in whole, is not permitted unless authorised by Volkswagen AG. Volkswagen AG does not guarantee or accept any liability with respect to the correctness of information in this document. Copyright by Volkswagen AG.

Version D4: 12 Openings,1.4 mm Each

Used with 4-pin and 6-pin universal oxygen sensors.

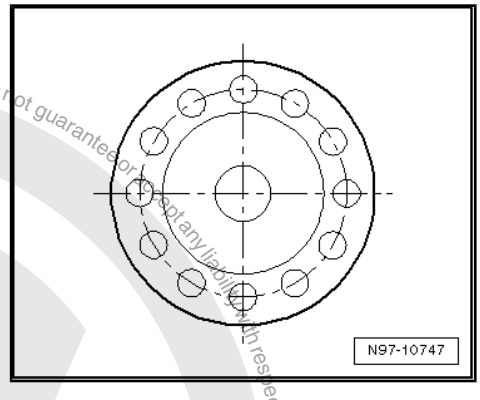

Protected by copyright. Copying for private or commercial purposes, in part or in whole, is not permitted unless authorised by Volkswagen AG. Volkswagen AG does not guarantee or accept any liability with respect to the correctness of information in this document. Copyright by Volkswagen AG.

8 Special Tools

Special tools and workshop equipment required

- Torque Wrench 1331 5-50Nm - VAG1331-

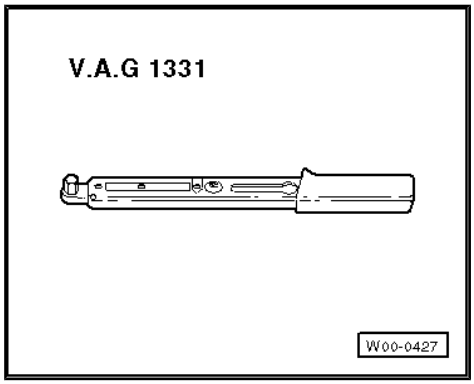

- Wiring Harness Repair Set - VAS1978-

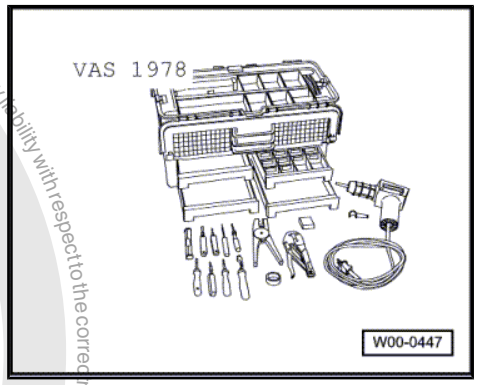

- Wiring Harness Repair Set - VAS1978A-

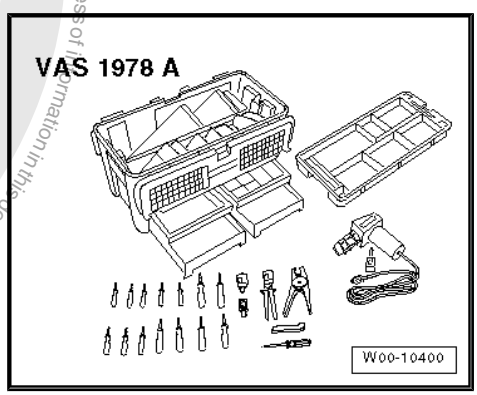

- Wiring Harness Repair Set - Hot Air Blower - VAS1978/14A-

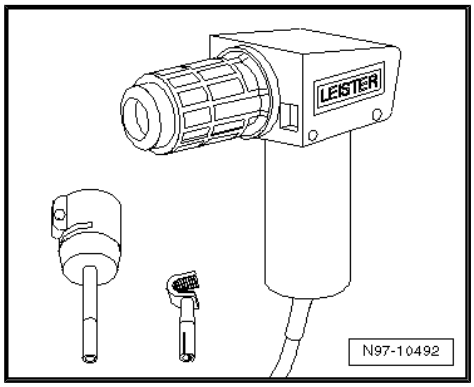

Protected by copyright. Copying for private or commercial purposes, in part or in whole, is not permitted unless authorised by Volkswagen AG. Volkswagen AG does not guarantee or accept any liability with respect to the correctness of information in this document. Copyright by Volkswagen AG.

- Release Tool Set - VAS1978/35-

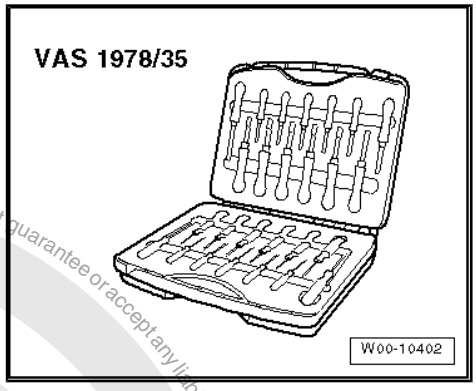

- Upgrade Kit For VAS1978 - VAS1978/50-

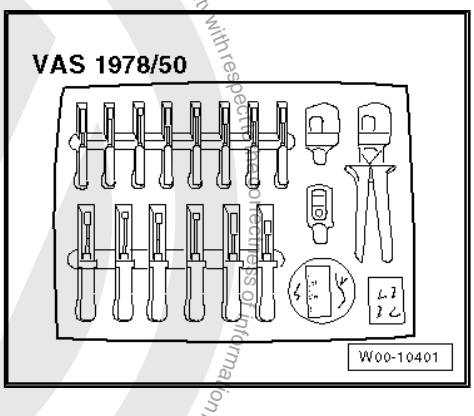

- Fiber-Optic Conductor Repair Set - VAS6223A-

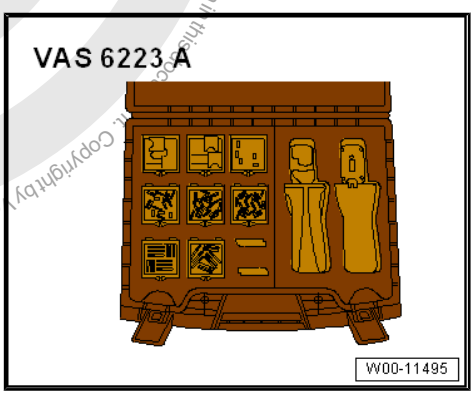

- Hose Cutting Pliers - VAS6228-

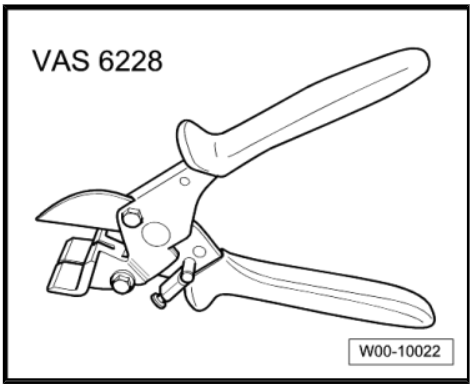

Protected by copyright. Copying for private or commercial purposes, in part or in whole, is not permitted unless authorised by Volkswagen AG. Volkswagen AG does not guarantee or accept any liability with respect to the correctness of information in this copy. Copyright by Volkswagen AG.

- Contact Surface Cleaning Set - VAS6410-

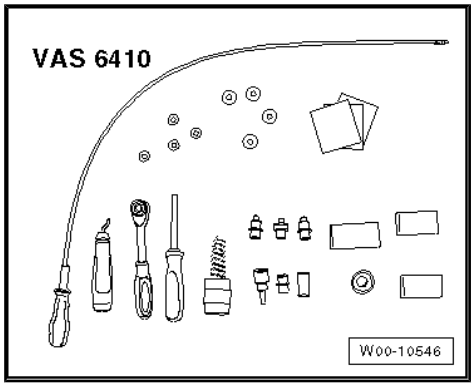

Edition K0059070121 C 04/02/2015- TMP

Protected by copyright. Copying for private or commercial purposes, in part or in whole, is not permitted unless authorised by Volkswagen AG. Volkswagen AG does not guarantee or accept any liability with respect to the correctness of information in this document. Copyright by Volkswagen AG.

9 Revision History

Revision	Date	Job Type	Feedback #	Notes	Editor
6	04/02/2015	Correction		Added missing metadata (BX5)	Tom Perry
5	1/21/2015	Factory Update	N/A		Jim Harder
4	11/24/2014	Correction	N/A	Deleted Warranty Service Circulars - not NAR per email from R. Andrade	Yambrick
3	08/20/2014	Factory Update	N/A		Tom Perry
2	06/17/2014	Factory Update	N/A		Tom Perry
1	4/23/2014	Factory New	N/A		Jim Harder

Protected by copyright. Copying for private or commercial purposes, in part or in whole, is not permitted unless authorised by Volkswagen AG. Volkswagen AG does not guarantee or accept any liability with respect to the correctness of information in this document. Copyright by Volkswagen AG.

Cautions & Warnings

Please read these WARNINGS and CAUTIONS before proceeding with maintenance and repair work. You must answer that you have read and you understand these WARNINGS and CAUTIONS before you will be allowed to view this information.

- If you lack the skills, tools and equipment, or a suitable workshop for any procedure described in this manual, we suggest you leave such repairs to an authorized Volkswagen retailer or other qualified shop. We especially urge you to consult an authorized Volkswagen retailer before beginning repairs on any vehicle that may still be covered wholly or in part by any of the extensive warranties issued by Volkswagen.

- Disconnect the battery negative terminal (ground strap) whenever you work on the fuel system or the electrical system. Do not smoke or work near heaters or other fire hazards. Keep an approved fire extinguisher handy.

- Volkswagen is constantly improving its vehicles and sometimes these changes, both in parts and specifications, are made applicable to earlier models. Therefore, part numbers listed in this manual are for reference only. Always check with your authorized Volkswagen retailer parts department for the latest information.

- Any time the battery has been disconnected on an automatic transmission vehicle, it will be necessary to reestablish Transmission Control Module (TCM) basic settings using the VAG 1551 Scan Tool (ST).

- Never work under a lifted vehicle unless it is solidly supported on stands designed for the purpose. Do not support a vehicle on cinder blocks, hollow tiles or other props that may crumble under continuous load. Never work under a vehicle that is supported solely by a jack. Never work under the vehicle while the engine is running.

- For vehicles equipped with an anti-theft radio, be sure of the correct radio activation code before disconnecting the battery or removing the radio. If the wrong code is entered when the power is restored, the radio may lock up and become inoperable, even if the correct code is used in a later attempt.

- If you are going to work under a vehicle on the ground, make sure that the ground is level. Block the wheels to keep the vehicle from rolling. Disconnect the battery negative terminal (ground strap) to prevent others from starting the vehicle while you are under it.

- Do not attempt to work on your vehicle if you do not feel well. You increase the danger of injury to yourself and others if you are tired, upset or have taken medicine or any other substances that may impair you or keep you from being fully alert.

- Never run the engine unless the work area is well ventilated. Carbon monoxide (CO) kills.

- Always observe good workshop practices. Wear goggles when you operate machine tools or work with acid. Wear goggles, gloves and other protective clothing whenever the job requires working with harmful substances.

- Tie long hair behind your head. Do not wear a necktie, a scarf, loose clothing, or a necklace when you work near machine tools or running engines. If your hair, clothing, or jewelry were to get caught in the machinery, severe injury could result.

- Do not re-use any fasteners that are worn or deformed in normal use. Some fasteners are designed to be used only once and are unreliable and may fail if used a second time. This includes, but is not limited to, nuts, bolts, washers, circlips and cotter pins. Always follow the recommendations in this manual - replace these fasteners with new parts where indicated, and any other time it is deemed necessary by inspection.

next

© 2002 Volkswagen of America, Inc.
All rights reserved. Information contained in this document is based on the latest information available at the time of printing and is subject to the copyright and other intellectual property rights of Volkswagen of America, Inc., its affiliated companies and its licensors. All rights are reserved to make changes at any time without notice. No part of this document may be reproduced, stored in a retrieval system, or transmitted in any form or by any means, electronic, mechanical, photocopying, recording, or otherwise, nor may these materials be modified or reposted to other sites, without the prior expressed written permission of the publisher.
Version 1.0

Cautions & Warnings

- Illuminate the work area adequately but safely. Use a portable safety light for working inside or under the vehicle. Make sure the bulb is enclosed by a wire cage. The hot filament of an accidentally broken bulb can ignite spilled fuel or oil.

- Friction materials such as brake pads and clutch discs may contain asbestos fibers. Do not create dust by grinding, sanding, or by cleaning with compressed air. Avoid breathing asbestos fibers and asbestos dust. Breathing asbestos can cause serious diseases such as asbestosis or cancer, and may result in death.

- Finger rings should be removed so that they cannot cause electrical shorts, get caught in running machinery, or be crushed by heavy parts.

- Before starting a job, make certain that you have all the necessary tools and parts on hand. Read all the instructions thoroughly; do not attempt shortcuts. Use tools that are appropriate to the work and use only replacement parts meeting Volkswagen specifications. Makeshift tools, parts and procedures will not make good repairs.

- Catch draining fuel, oil or brake fluid in suitable containers. Do not use empty food or beverage containers that might mislead someone into drinking from them. Store flammable fluids away from fire hazards. Wipe up spills at once, but do not store the oily rags, which can ignite and burn spontaneously.

- Use pneumatic and electric tools only to loosen threaded parts and fasteners. Never use these tools to tighten fasteners, especially on light alloy parts. Always use a torque wrench to tighten fasteners to the tightening torque listed.

- Keep sparks, lighted matches, and open flame away from the top of the battery. If escaping hydrogen gas is ignited, it will ignite gas trapped in the cells and cause the battery to explode.

- Be mindful of the environment and ecology. Before you drain the crankcase, find out the proper way to dispose of the oil. Do not pour oil onto the ground, down a drain, or into a stream, pond, or lake. Consult local ordinances that govern the disposal of wastes.

- The air-conditioning (A/C) system is filled with a chemical refrigerant that is hazardous. The A/C system should be serviced only by trained automotive service technicians using approved refrigerant recovery/recycling equipment, trained in related safety precautions, and familiar with regulations governing the discharging and disposal of automotive chemical refrigerants.

- Before doing any electrical welding on vehicles equipped with anti-lock brakes (ABS), disconnect the battery negative terminal (ground strap) and the ABS control module connector.

- Do not expose any part of the A/C system to high temperatures such as open flame. Excessive heat will increase system pressure and may cause the system to burst.

- When boost-charging the battery, first remove the fuses for the Engine Control Module (ECM), the Transmission Control Module (TCM), the ABS control module, and the trip computer. In cases where one or more of these components is not separately fused, disconnect the control module connector(s).

- Some of the vehicles covered by this manual are equipped with a supplemental restraint system (SRS), that automatically deploys an airbag in the event of a frontal impact. The airbag is operated by an explosive device. Handled improperly or without adequate safeguards, it can be accidentally activated and cause serious personal injury. To guard against personal injury or airbag system failure, only trained Volkswagen Service technicians should test, disassemble or service the airbag system.

back next

© 2002 Volkswagen of America, Inc.
All rights reserved. Information contained in this document is based on the latest information available at the time of printing and is subject to the copyright and other intellectual property rights of Volkswagen of America, Inc., its affiliated companies and its licensors. All rights are reserved to make changes at any time without notice. No part of this document may be reproduced, stored in a retrieval system, or transmitted in any form or by any means, electronic, mechanical, photocopying, recording, or otherwise, nor may these materials be modified or reposted to other sites, without the prior expressed written permission of the publisher.
Version 1.0

Cautions & Warnings

- Do not quick-charge the battery (for boost starting) for longer than one minute, and do not exceed 16.5 volts at the battery with the boosting cables attached. Wait at least one minute before boosting the battery a second time.

- Never use a test light to conduct electrical tests of the airbag system. The system must only be tested by trained Volkswagen Service technicians using the VAG 1551 Scan Tool (ST) or an approved equivalent. The airbag unit must never be electrically tested while it is not installed in the vehicle.

- Some aerosol tire inflators are highly flammable. Be extremely cautious when repairing a tire that may have been inflated using an aerosol tire inflator. Keep sparks, open flame or other sources of ignition away from the tire repair area. Inflate and deflate the tire at least four times before breaking the bead from the rim. Completely remove the tire from the rim before attempting any repair.

- When driving or riding in an airbag-equipped vehicle, never hold test equipment in your hands or lap while the vehicle is in motion. Objects between you and the airbag can increase the risk of injury in an accident.

I have read and I understand these Cautions and Warnings.

back OK

Protected by copyright. Copying for private or commercial purposes, in part or in whole, is not permitted unless authorized by Volkswagen AG. Volkswagen AG does not guarantee or accept any liability with respect to the correctness of information in this document. Copyright by Volkswagen AG.

© 2002 Volkswagen of America, Inc.
All rights reserved. Information contained in this document is based on the latest information available at the time of printing and is subject to the copyright and other intellectual property rights of Volkswagen of America, Inc., its affiliated companies and its licensors. All rights are reserved to make changes at any time without notice. No part of this document may be reproduced, stored in a retrieval system, or transmitted in any form or by any means, electronic, mechanical, photocopying, recording, or otherwise, nor may these materials be modified or reposted to other sites, without the prior expressed written permission of the publisher.
Version 1.0